PANEL SYSTEM

(GROUND CUT-OFF)

TRAINING MANUAL

SEQUENCE CHARTS AND OPERATIONAL SKETCHES

THE AMERICAN TELEPHONE AND TELEGRAPH COMPANY

OPERATION AND ENGINEERING DEPARTMENT

PLANT OPERATION DIVISION

FOR TRAINING PURPOSES ONLY

PRINTED IN U.S.A.

MARCH 1955

INDEX

GENERAL NUMBERING

100 - 109 LINE, TRIP, START, LINK (LINK TYPE)
110 - 119 LF-DIST. SEL. CKTS (" ")
120 - 139 SUB. SENDER (" ")
140 - 145 OFFICE SEL. CKTS
146 - 149 MISC. OUTGOING TRUNKS
150 - 155 INCOMING SEL. CKTS (FULL MECH.)
156 - 159 " " " (MANUAL)
160 - 169 FINAL SEL. CKTS
170 - 179 "B" LINK AND ALLOTTER CKTS.
180 - 189 KEY CONTROL AND "B" SENDER
190 - 199 MISCELLANEOUS CKTS

200 - 209 LINE, TRIP, START (SDR. SEL. TYPE)
210 - 219 LF-DIST SEL. CKTS (" " ")
220 - 239 SUB. SENDER (" " ")

CIRCUIT	TYPE	SKETCHES FROM	RELATED CIRCUITS
000A INDEX			
000B LEGEND			
100.1 - 109.1 LINE, TRIP, START, LINK	LINK TYPE	ES-20298-01	
110.1 - 119.1 LF-DIST SEL. CKT - MRI	LINK TYPE	ES-21030-01	
110.2 - 119.2 " " " " - COIN	" "	ES-21031-01	
120.1 - 139.1 SUB. SENDER (SEL. TYPE)	WITH LINK & DECODER	ES-20012-02	
140.1 - 145.1 OFFICE SEL. CKT	1 CALL PER REV.	ES-195575	
140.2 - 145.2 " " "	2 CALLS PER REV.	ES-240252	
150.1 - 155.1 INC. SEL CKT (1 AND 2-PTY)	FULL MECH. (NON-REPT)	ES-21036-01	ES-226524
150.2 - 155.2 " " " (1 AND 2-PTY)	" " (REPT)	ES-20292-01	
156.1 - 159.1 INC. SEL. CKT (1 AND 2-PTY)	MANUAL - POS. DISTR. "B"	SD-21796-01	
156.2 - 159.2 " " " (1 AND 2-PTY)	" - CORDLESS "B"	ES-20070	
160.1 - 169.1 FINAL SEL. CKT	WITH TIME MEASURE RELEASE	ES-239664-01	
170.1 - 179.1 "B" LINK, ALLOTTER, POS. FINDER	POS. DISTR. "B"	SD-21801-01	
170.2 - 179.2 "B" LINK, ALLOTTER	CORDLESS "B"	ST-51029-04	
180.1 - 189.1 KEY CONTROL AND "B" SENDER	POS. DISTR. "B"	SD-21802-01 SD-20033-01	
180.2 - 189.2 " " " " "	CORDLESS "B"	ST-51029-04	
190.1 - 199.1 SERVICE OBSERVING	FOR LOCAL ORIG. TRAFFIC	SD-90242-01 AND SD-21425-01	
190.2 - 199.2 " "	FOR USE WITH #10 C.O. DESK	SD-90580-01	
190.3 - 199.3 " "	FOR OBSERVING ON TRUNKS (LOCAL OPR'S)	SD-20219-011	
200.1 - 209.1 LINE, TRIP, START	SDR. SEL. TYPE - 400 PT LF.	ES-240292-3	
200.2 - 209.2 " " "	" " " - 300 PT. LF	T-501003	T-512374, T-431434, ES-207197
210.1 - 219.1 LF-DIST. SEL. CKT - MRI	SDR SEL. TYPE	ES-240071	T-501002, T-512374, T-431434, ST-52005 ES-207198-9
220.1 - 239.1 SUB. SENDER (SEL. TYPE)	WITH SDR. SEL. & TRANSLATOR	ES-240053	
220.2 - 239.2 " " (" ")	" " " & DECODER	SD-21826-01	

ISSUE	1
DATE	12-50
BY	CHH

GENERAL NUMBERING AND INDEX

PANEL | GROUND CUT-OFF | OS-000A

OPERATIONAL SKETCHES

A 2T 1T — INDICATES CONTACTS 1T AND 2T OF (A) RELAY (CLOSED WHEN RELAY IS OPERATED).

A 3T 4T — INDICATES CONTACTS 3T AND 4T OF (A) RELAY (CLOSED WHEN RELAY IS NORMAL).

B — INDICATES TRANSFER CONTACTS OF (B) RELAY

RELAY DESIGNATIONS:

A/B — (A) RELAY OR (B) RELAY

A(0-9) — ALL OF A SERIES OF RELAYS A0 TO A9

A- — ONE OF A SERIES OF (A) RELAYS

P — RELAY HAS MORE THAN ONE WINDING. ONLY PRIMARY WINDING IS USED IN THE PARTICULAR OPERATIONAL SKETCH.

P S — SECONDARY WINDING IS NON-INDUCTIVE.

-17½ 2- — SEQUENCE SWITCH CAMS (BRUSHES 1 & 3) MAY HAVE ADDITIONAL CUTTINGS, BUT ONLY THOSE ARE SHOWN WHICH ARE OF INTEREST IN THE PARTICULAR OPERATIONAL SKETCH.

NOTE: A-CAM BRUSH 2 IS OMITTED ON SKETCHES EXCEPT WHEN USED AS AN ADVANCE PATH FOR A PASS-BY POSITION OF THE SWITCH.

-48 — 48 VOLT NEGATIVE BATTERY.

-48 — "OFF-NORMAL" BATTERY.

"OFF-NORMAL" GROUND.

TH ARC 5 9 — ROTARY TYPE SELECTOR (DESIGNATION "TH") IS ON TERMINAL 9.

TH ARC 5 9,11,13 — ROTARY TYPE SELECTOR IS ON TERMINAL 9, 11, OR 13 (WHICH ARE STRAPPED TOGETHER)

A (D) G — INDICATES DISTRICT COMMUTATOR SEGMENTS "A" AND "G" (WITH CORRESPONDING COMMUTATOR BRUSHES STRAPPED TOGETHER).

(N) — INDICATES OPTIONAL WIRING (NOTES ON SD-DRAWING)

(B) — INDICATES OPTIONAL APPARATUS FIG. (NOTES ON SD-DRAWING)

MB JK — INDICATES NORMALLY CLOSED CONTACTS IN MAKE-BUSY JACK.

MB JK — INDICATES CONTACTS IN MAKE-BUSY JACK WHICH ARE CLOSED WHEN JACK SPRINGS ARE OPERATED

INDICATES PORTION OF OTHER CIRCUIT INCLUDED IN ORDER TO MAKE THE CIRCUIT PATH AS COMPLETE AS POSSIBLE. THE ENCLOSED PORTION IS USUALLY NOT SHOWN IN DETAIL, BUT REFERENCE IS GENERALLY MADE TO THE PARTICULAR OS-SHEET WHERE THE DETAILS MAY BE FOUND.

ISSUE	DATE	BY
1	4-54	GHH

SEQUENCE CHARTS

A — (A) RELAY OPERATES.

A — (A) RELAY RELEASES.

R D 3 — DISTRICT SEQ. SWITCH HAS MOVED TO POS. 3.

B SEL — (B) ROTARY TYPE SELECTOR (200-TYPE AND OTHERS) IS ENERGIZED.

B SEL — (B) ROTARY TYPE SELECTOR IS DE-ENERGIZED AND STEPS (ONE STEP UNLESS OTHERWISE INDICATED).

LF UP — LINE-FINDER UP-DRIVE OPERATES. (SELECTOR TRAVELS UP)

LF UP — LINE-FINDER UP-DRIVE RELEASES. (SELECTOR STOPS)

A — SELECTOR HAS MOVED AND IS CONTACTING "A" COMMUTATOR SEGMENT.

A — SELECTOR HAS MOVED AND CONTACT WITH "A" COMMUTATOR SEGMENT IS BROKEN.

H — MULTIPE BRUSH MAKES CONTACT WITH "H" BANK TERMINAL.

(F) CHG — "CHG" INTERRUPTER CLOSES FRONT CONTACT.

(F) CHG — "CHG" INTERRUPTER OPENS FRONT CONTACT.

SEQUENCE CHART PROGRESSION IS DOWNWARD:

A B — RELAY (B) RELEASES AS A RESULT OF RELAY (A) OPERATING.

HORIZONTAL LINES ARE USED TO INDICATE MULTIPLE CAUSES OR MULTIPLE EFFECTS:

A B C — RELAY (C) OPERATES AS A RESULT OF BOTH RELAY (A) AND RELAY (B) OPERATING.

A B C — RELAY (C) OPERATES AS A RESULT OF EITHER RELAY (A) OR RELAY (B) OPERATING.

USE OF DIRECTIONAL ARROWS OR STAGGERING:

A B C D E — RELAY (C) OPERATES FROM RELAY (A) ALONE, BUT RELAYS (D) AND (E) REQUIRE BOTH RELAYS (A) AND (B).

A B C D E — RELAY (C) OPERATES FROM RELAY (A) ALONE AND RELAY (E) OPERATES FROM RELAY (B) ALONE, BUT RELAY (D) REQUIRES BOTH RELAYS (A) AND (B).

INCLUSION OF OTHER CIRCUITS:

INDICATES PORTION OF OTHER CIRCUIT ACTION INCLUDED IN ORDER TO GIVE MEANING TO THE CIRCUIT ACTION DEPICTED ON THE SEQUENCE CHART.

THE ENCLOSED PORTION IS USUALLY NOT SHOWN IN DETAIL, BUT REFERENCE IS GENERALLY MADE TO THE PARTICULAR OS-SHEET WHERE THE DETAILED SEQUENCE CHART MAY BE FOUND.

THE ENCLOSURE IS ALSO USED AS A TRANSITION FROM ANOTHER SEQUENCE CHART TO INDICATE DUPLICATION.

LEGEND FOR OPERATIONAL SKETCHES AND SEQUENCE CHARTS

PANEL SYSTEM — OS-000B

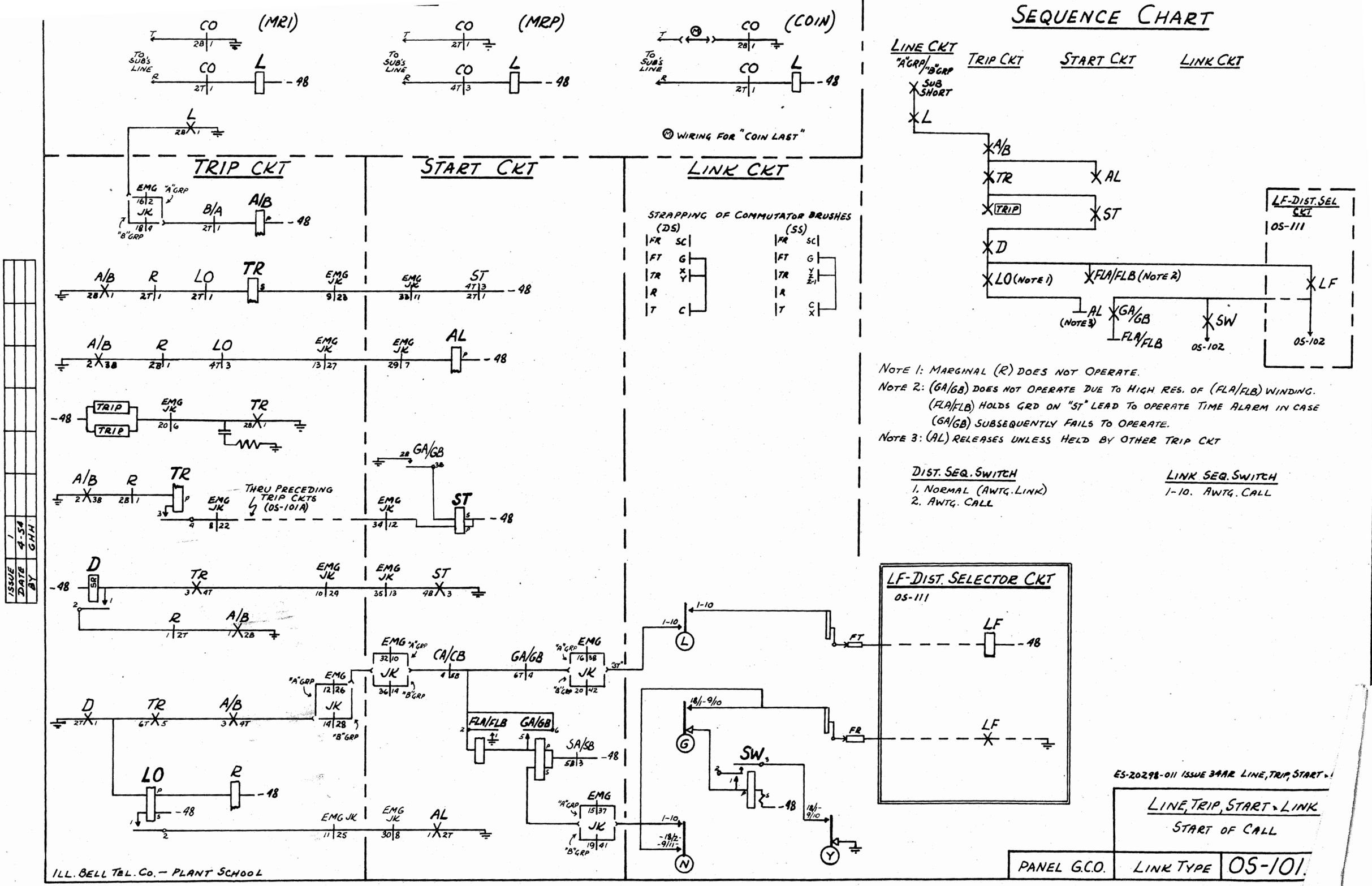
(MRI)
(MRP)
(COIN)
TO SUB'S LINE
CO
L
-48
WIRING FOR "COIN LAST"
TRIP CKT
START CKT
LINK CKT
EMG JK
"A" GRP
"B" GRP
B/A
A/B
R
LO
TR
ST
AL
TRIP
GA/GB
THRU PRECEDING TRIP CKTS (OS-101A)
D
SR
CA/CB
FLA/FLB
SA/SB
STRAPPING OF COMMUTATOR BRUSHES
(DS)
(SS)
FR
SC
FT
TR
R
T
G
X
Y
C
Z
SEQUENCE CHART
LINE CKT
"A"GRP/"B"GRP
TRIP CKT
START CKT
LINK CKT
SUB SHORT
LO (NOTE 1)
FLA/FLB (NOTE 2)
(NOTE 3)
SW
LF-DIST. SEL CKT
OS-111
OS-102
NOTE 1: MARGINAL (R) DOES NOT OPERATE.
NOTE 2: (GA/GB) DOES NOT OPERATE DUE TO HIGH RES. OF (FLA/FLB) WINDING. (FLA/FLB) HOLDS GRD ON "ST" LEAD TO OPERATE TIME ALARM IN CASE (GA/GB) SUBSEQUENTLY FAILS TO OPERATE.
NOTE 3: (AL) RELEASES UNLESS HELD BY OTHER TRIP CKT
DIST. SEQ. SWITCH
1. NORMAL (AWTG. LINK)
2. AWTG. CALL
LINK SEQ. SWITCH
1-10. AWTG. CALL
LF-DIST. SELECTOR CKT
OS-111
LF
1-10
18/-9/10
-18/2-9/11-
ES-20298-011 ISSUE 34AR LINE, TRIP, START & LINK
LINE, TRIP, START & LINK
START OF CALL
PANEL G.C.O.
LINK TYPE
OS-101
ILL. BELL TEL. CO. — PLANT SCHOOL
ISSUE 1
DATE 4-54
BY GHH

TRIP CKT PREFERENCE AND LOCK-OUT

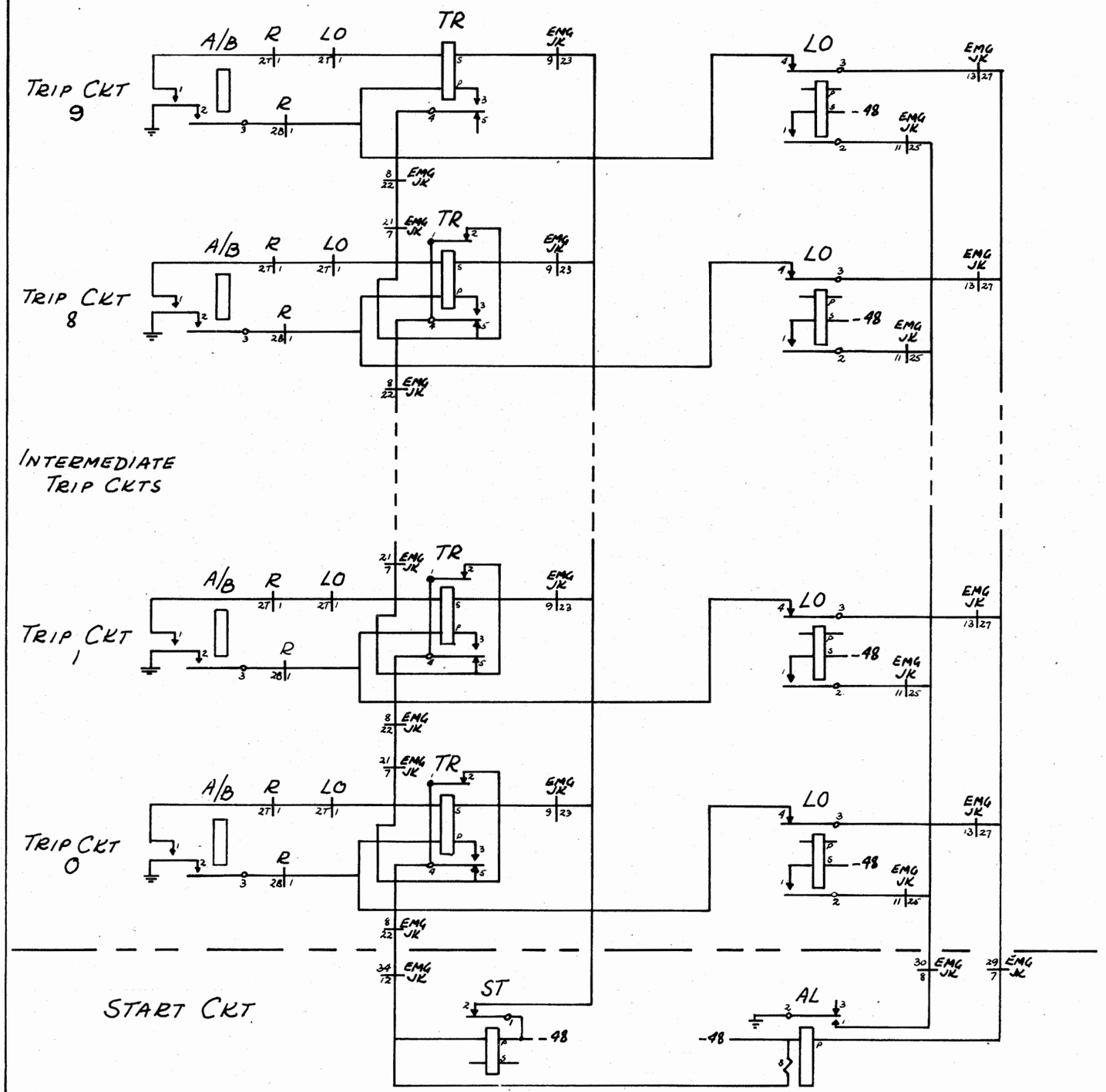

LINK ALLOTTING

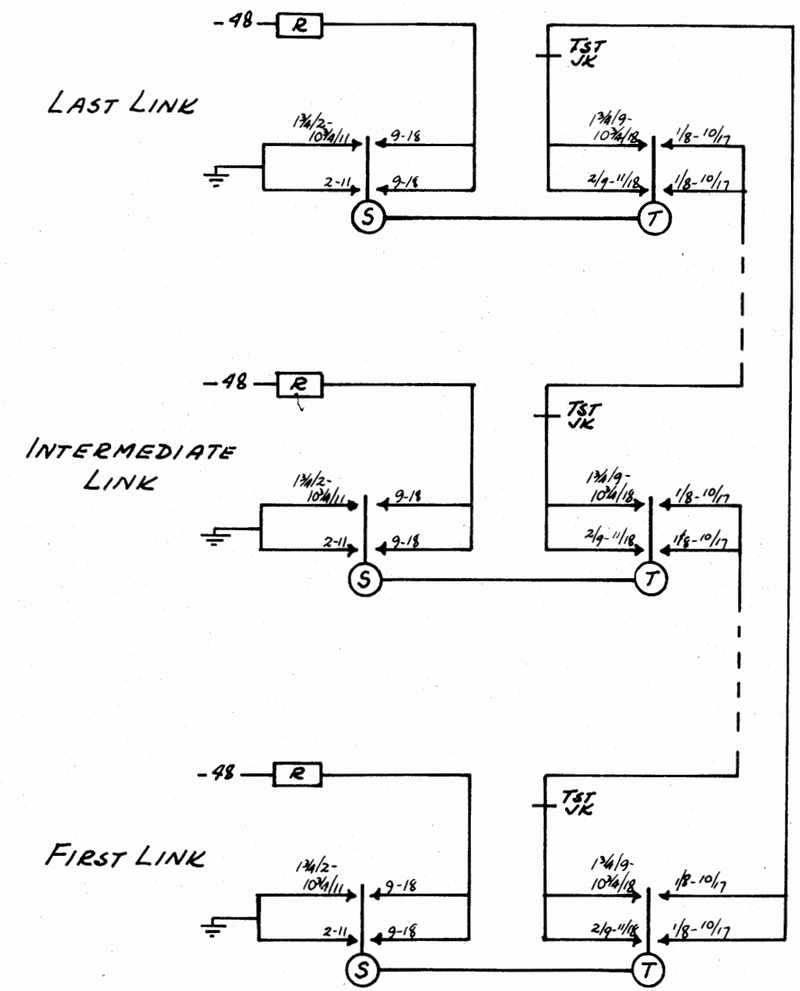

LINK SEQ. SWITCH

1-10 AWTG. CALL
2-11 HUNT SENDER
3-12 AWTG. SENDER
4-13 PASS-BY
5-14 CUT-THRU
6-15 PASS-BY (OR RETURN FROM LAST 10 OR 20 SDRS)
7-16 HUNT DIST. (OR OUT-OF-SERV)
8-17 AWTG. DIST.
9-18 AWTG. ALLOTMENT

ISSUE	1
DATE	9-54
BY	GHH

ES-20298-011 ISS. 34AR LINE, TRIP, START, L

TRIP CKT PREFERENCE & LOC
LINK ALLOTTING

PANEL GCO	LINK TYPE	OS-1C

ILL. BELL TEL. CO — PLANT SCHOOL

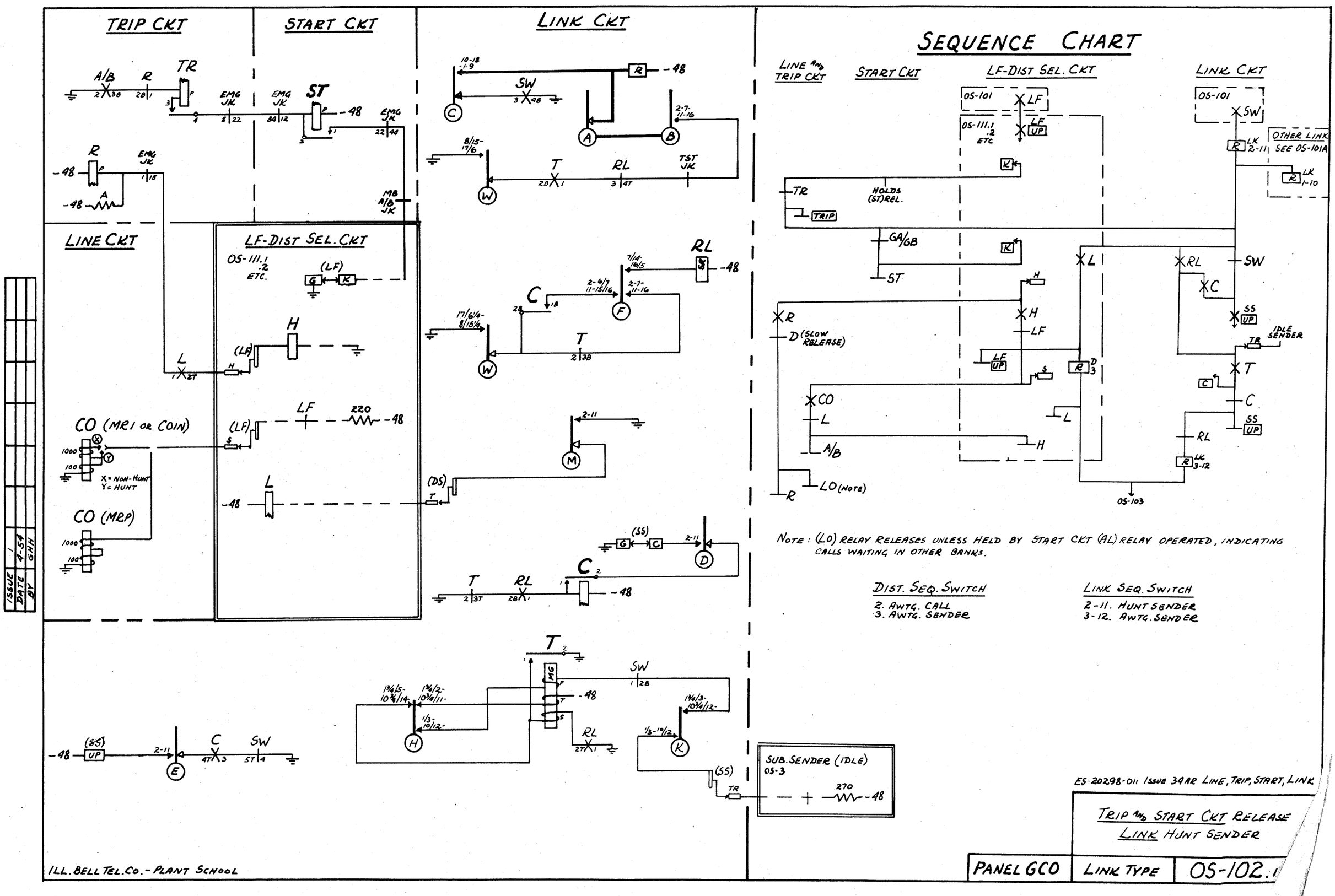
TRIP CKT
START CKT
LINK CKT
LINE CKT
LF-DIST SEL. CKT
SEQUENCE CHART
LINE AND TRIP CKT
START CKT
LF-DIST SEL. CKT
LINK CKT
CO (MR1 OR COIN)
X = NON-HUNT
Y = HUNT
CO (MRP)
OS-111.1 :2 ETC.
OS-101
OS-103
OTHER LINK SEE OS-101A
HOLDS (ST) REL.
D (SLOW RELEASE)
LO (NOTE)
IDLE SENDER
SUB. SENDER (IDLE) OS-3
NOTE: (LO) RELAY RELEASES UNLESS HELD BY START CKT (AL) RELAY OPERATED, INDICATING CALLS WAITING IN OTHER BANKS.
DIST. SEQ. SWITCH
2. AWTG. CALL
3. AWTG. SENDER
LINK SEQ. SWITCH
2-11. HUNT SENDER
3-12. AWTG. SENDER
ES-20298-011 ISSUE 34AR LINE, TRIP, START, LINK
TRIP AND START CKT RELEASE
LINK HUNT SENDER
PANEL GCO
LINK TYPE
OS-102.1
ILL. BELL TEL. CO. - PLANT SCHOOL
ISSUE 1
DATE 4-54
BY GHH

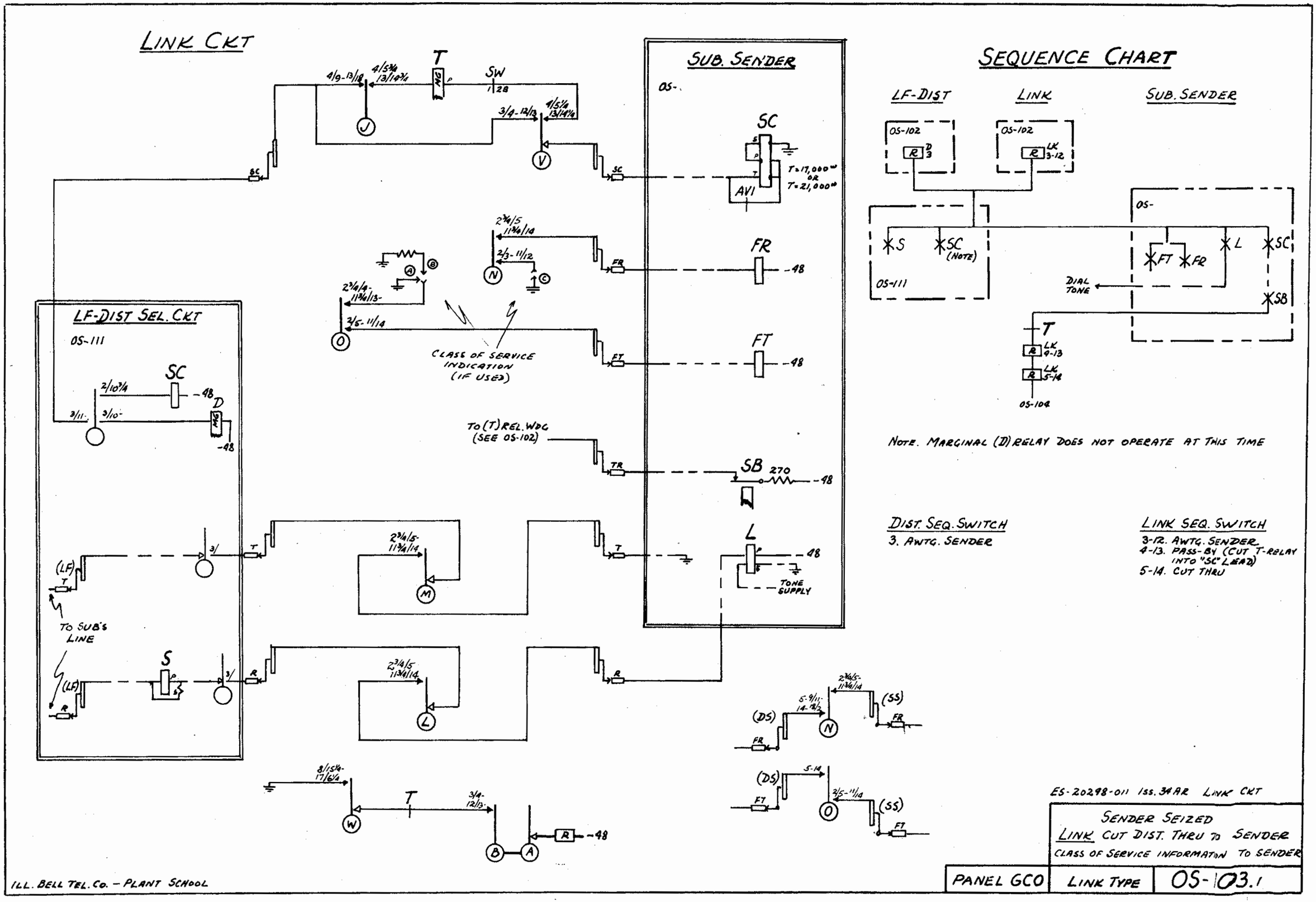
LINK CKT
SUB. SENDER
OS-
SC
AVI
T=17,000 OR T=21,000
FR
FT
SB 270
L
TONE SUPPLY
CLASS OF SERVICE INDICATION (IF USED)
TO (T) REL. WDG (SEE OS-102)
LF-DIST SEL. CKT
OS-111
SC
D
TO SUB'S LINE
S
SEQUENCE CHART
LF-DIST
LINK
SUB. SENDER
OS-102
OS-111
SC (NOTE)
DIAL TONE
OS-104
NOTE. MARGINAL (D) RELAY DOES NOT OPERATE AT THIS TIME
DIST. SEQ. SWITCH
3. AWTG. SENDER
LINK SEQ. SWITCH
3-12. AWTG. SENDER
4-13. PASS-BY (CUT T-RELAY INTO "SC" LEAD)
5-14. CUT THRU
ES-20298-011 ISS. 34AR LINK CKT
SENDER SEIZED
LINK CUT DIST. THRU TO SENDER
CLASS OF SERVICE INFORMATION TO SENDER
PANEL GCO
LINK TYPE
OS-103.1
ILL. BELL TEL. CO. – PLANT SCHOOL
ISSUE 1
DATE 4-54
BY GHH

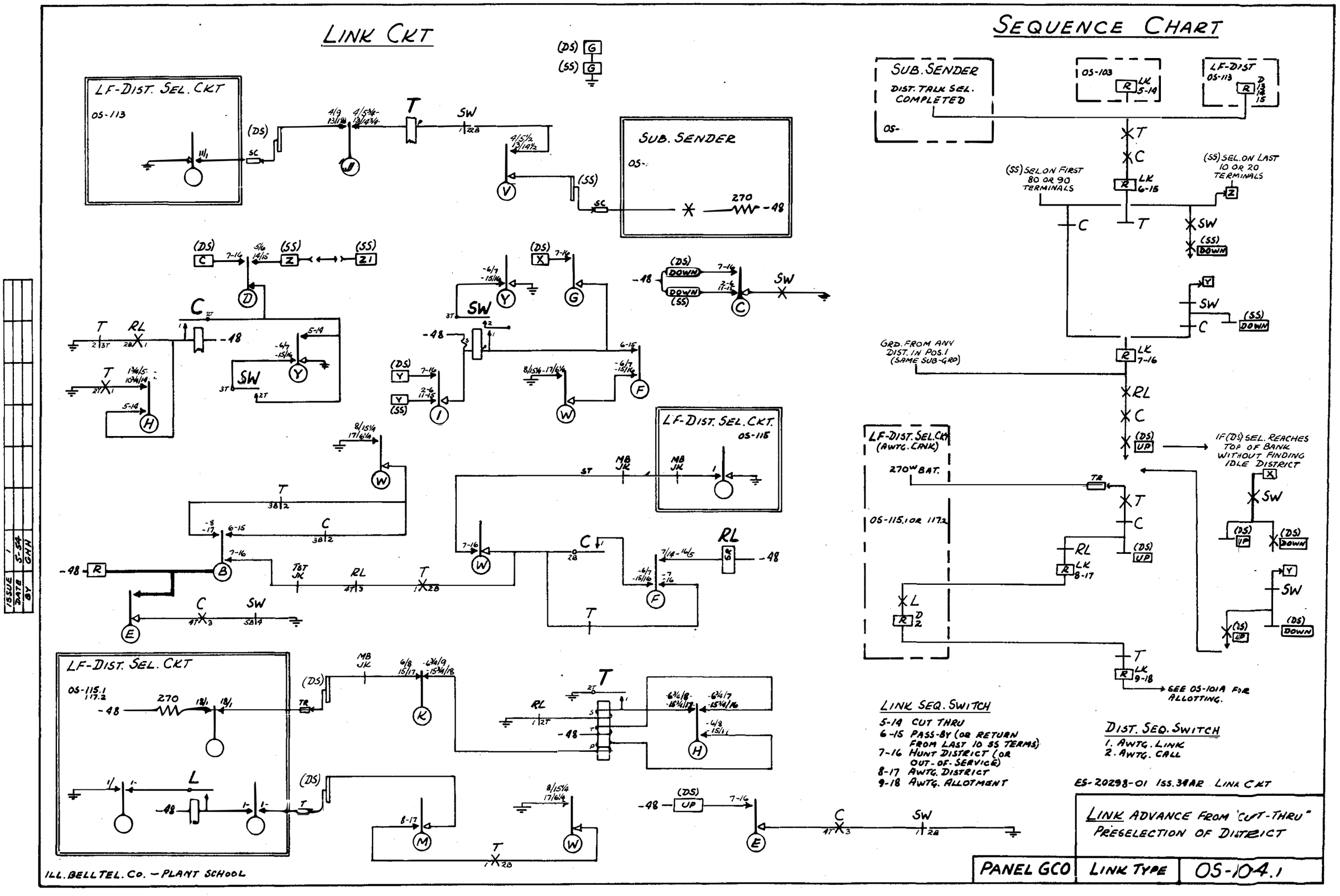
LINK CKT
SEQUENCE CHART
LF-DIST. SEL. CKT
OS-113
SUB. SENDER
OS-
270
-48
LF-DIST. SEL. CKT.
OS-115
LF-DIST. SEL. CKT
OS-115.1
117.2
SUB. SENDER
DIST. TALK SEL. COMPLETED
OS-103
LF-DIST
OS-113
(SS) SEL. ON FIRST 80 OR 90 TERMINALS
(SS) SEL. ON LAST 10 OR 20 TERMINALS
GRD. FROM ANY DIST. IN POS. 1 (SAME SUB-GRP)
IF (DS) SEL. REACHES TOP OF BANK WITHOUT FINDING IDLE DISTRICT
SEE OS-101A FOR ALLOTTING.
LF-DIST. SEL. CKT (AWTG. CALL)
270W BAT.
OS-115.1 OR 117.2
LINK SEQ. SWITCH
5-14 CUT THRU
6-15 PASS-BY (OR RETURN FROM LAST 10 SS TERMS)
7-16 HUNT DISTRICT (OR OUT-OF-SERVICE)
8-17 AWTG. DISTRICT
9-18 AWTG. ALLOTMENT
DIST. SEQ. SWITCH
1. AWTG. LINK
2. AWTG. CALL
ES-20298-01 ISS. 3AAR LINK CKT
LINK ADVANCE FROM "CUT-THRU" PRESELECTION OF DISTRICT
PANEL GCO
LINK TYPE
OS-104.1
ILL. BELL TEL. CO. — PLANT SCHOOL
ISSUE 1
DATE 5-54
BY GHH

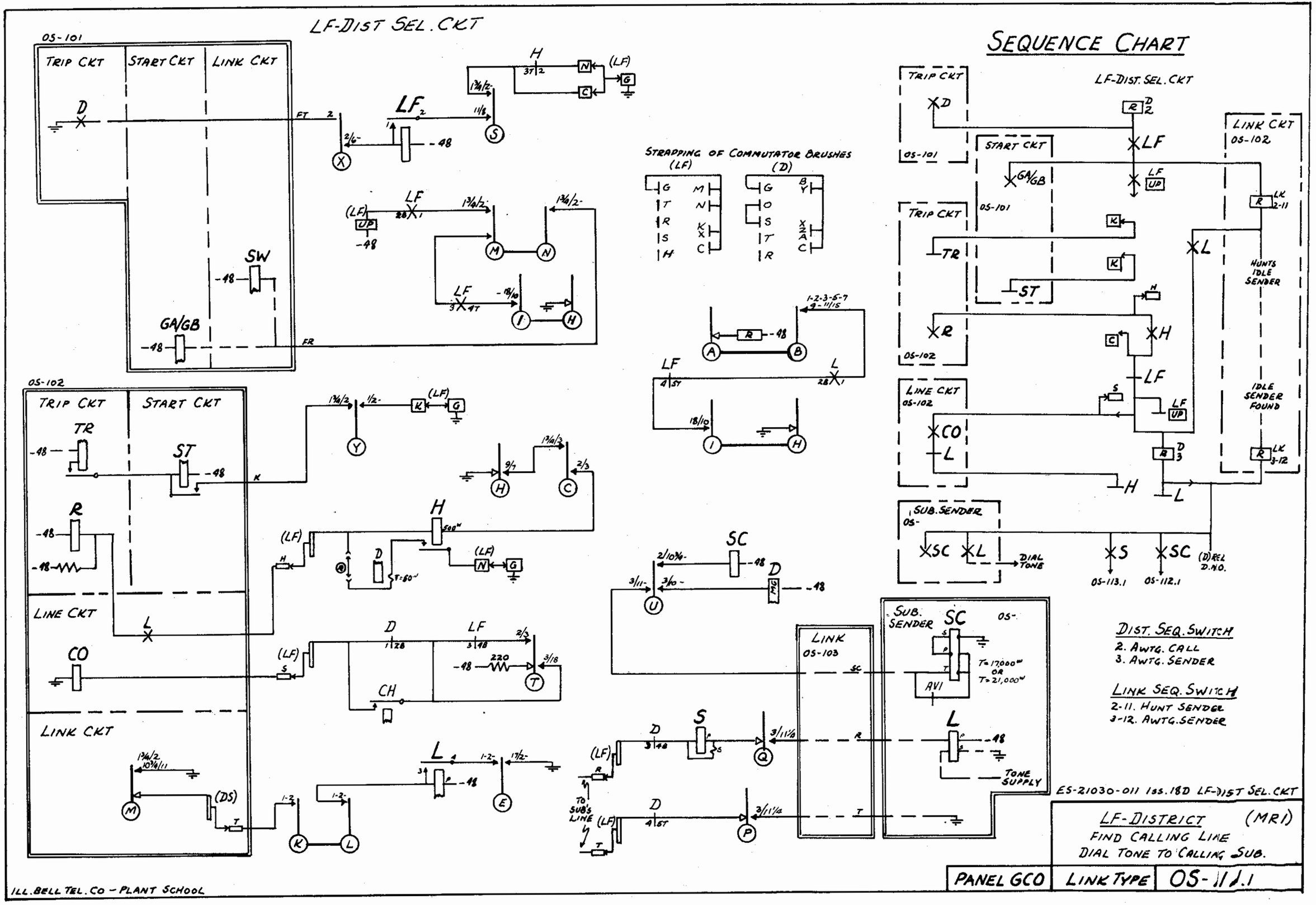
LF-DIST SEL. CKT
OS-101
TRIP CKT
START CKT
LINK CKT
D
FT
LF
SW
GA/GB
FR
OS-102
TRIP CKT
START CKT
TR
ST
R
LINE CKT
L
CO
LINK CKT
H
SC
S
CH
STRAPPING OF COMMUTATOR BRUSHES
(LF)
(D)
SEQUENCE CHART
TRIP CKT
LF-DIST. SEL. CKT
START CKT
LINK CKT
OS-102
HUNTS IDLE SENDER
IDLE SENDER FOUND
LINE CKT
SUB. SENDER
DIAL TONE
(D) REL D.NO.
OS-113.1
OS-112.1
LINK
OS-103
SUB. SENDER
AVI
TONE SUPPLY
TO SUB'S LINE
DIST. SEQ. SWITCH
2. AWTG. CALL
3. AWTG. SENDER
LINK SEQ. SWITCH
2-11. HUNT SENDER
3-12. AWTG. SENDER
ES-21030-011 Iss. 18D LF-DIST SEL. CKT
LF-DISTRICT (MR1)
FIND CALLING LINE
DIAL TONE TO CALLING SUB.
PANEL GCO
LINK TYPE
OS-112.1
ILL. BELL TEL. CO – PLANT SCHOOL
ISSUE 1
DATE 5-54
BY GHH

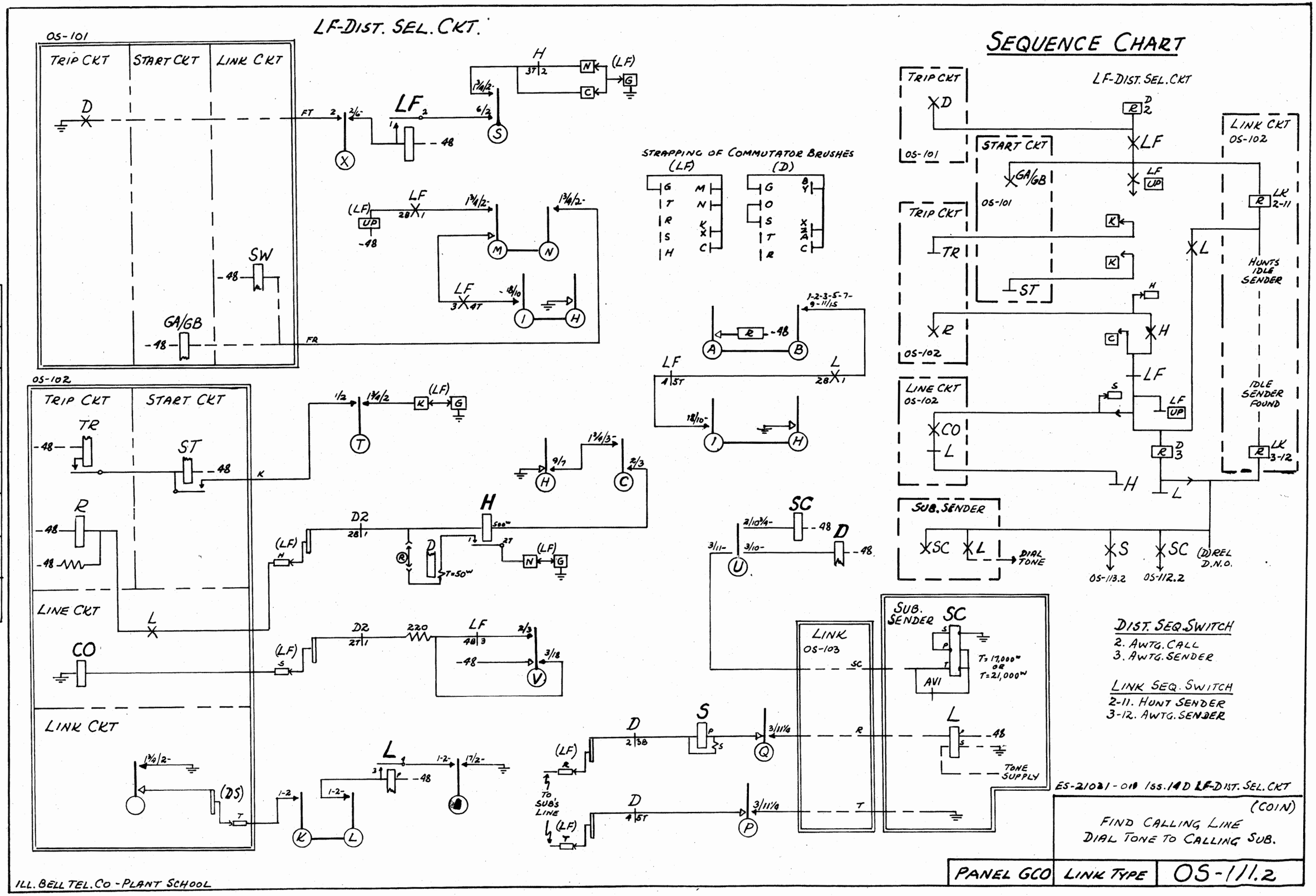
LF-DIST. SEL. CKT.
SEQUENCE CHART
OS-101
TRIP CKT
START CKT
LINK CKT
D
FT
FR
LF
SW
GA/GB
-48
(LF)
UP
M
N
I
H
S
X
T
R
K
C
G
STRAPPING OF COMMUTATOR BRUSHES
(LF)
(D)
OS-102
TR
ST
LINE CKT
CO
L
DS
V
D2
220
SC
U
Q
P
A
B
TO SUB'S LINE
SUB. SENDER
AVI
T=17,000~ OR T=21,000~
TONE SUPPLY
DIAL TONE
OS-113.2
OS-112.2
(D) REL D.N.O.
HUNTS IDLE SENDER
IDLE SENDER FOUND
LK 2-11
LK 3-12
DIST. SEQ. SWITCH
2. AWTG. CALL
3. AWTG. SENDER
LINK SEQ. SWITCH
2-11. HUNT SENDER
3-12. AWTG. SENDER
ES-21021-010 ISS.14D LF-DIST. SEL. CKT
(COIN)
FIND CALLING LINE
DIAL TONE TO CALLING SUB.
PANEL GCO
LINK TYPE
OS-111.2
ILL. BELL TEL. CO - PLANT SCHOOL
ISSUE
DATE
BY

LF-DIST CKT

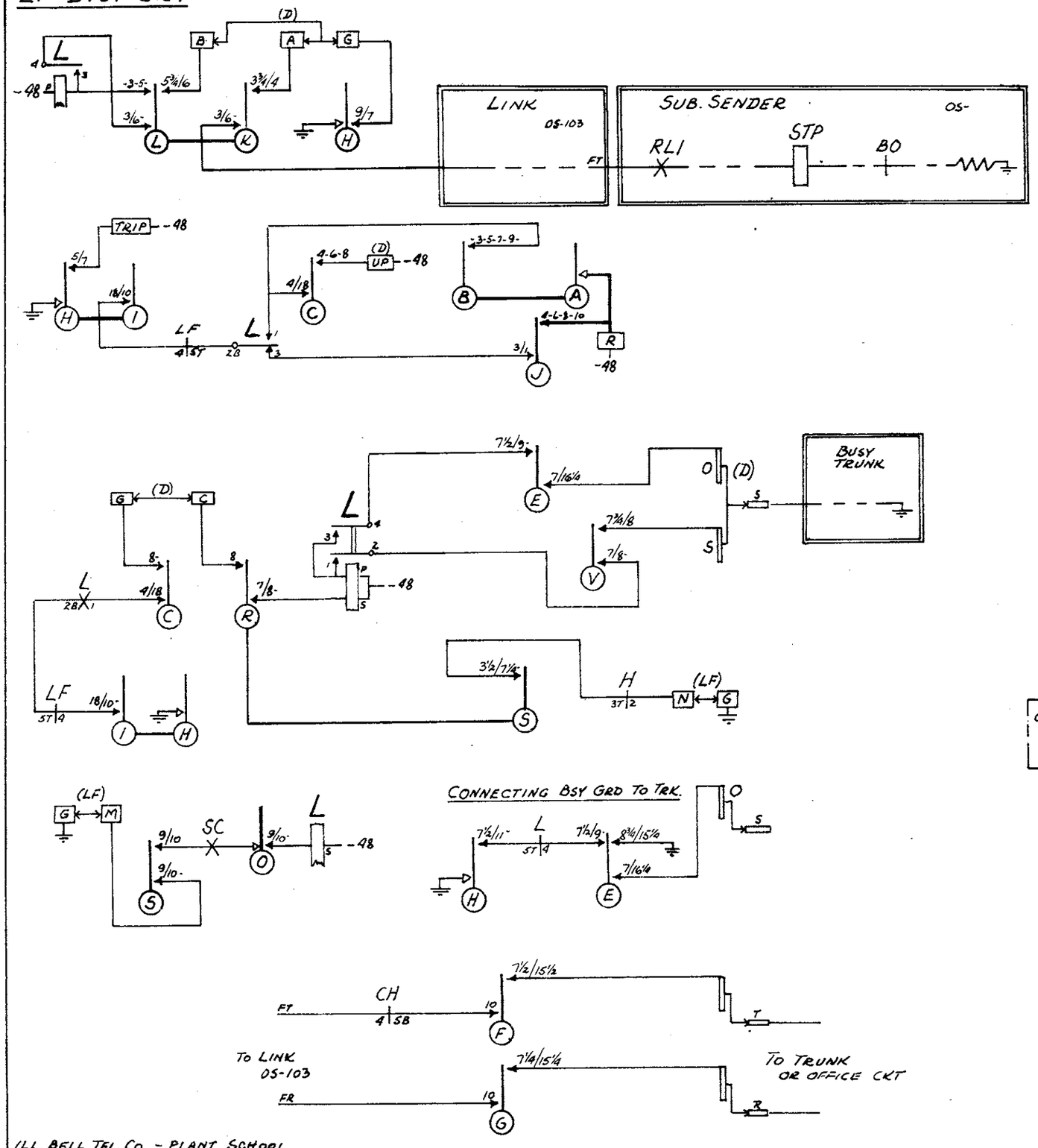

SEQUENCE CHART

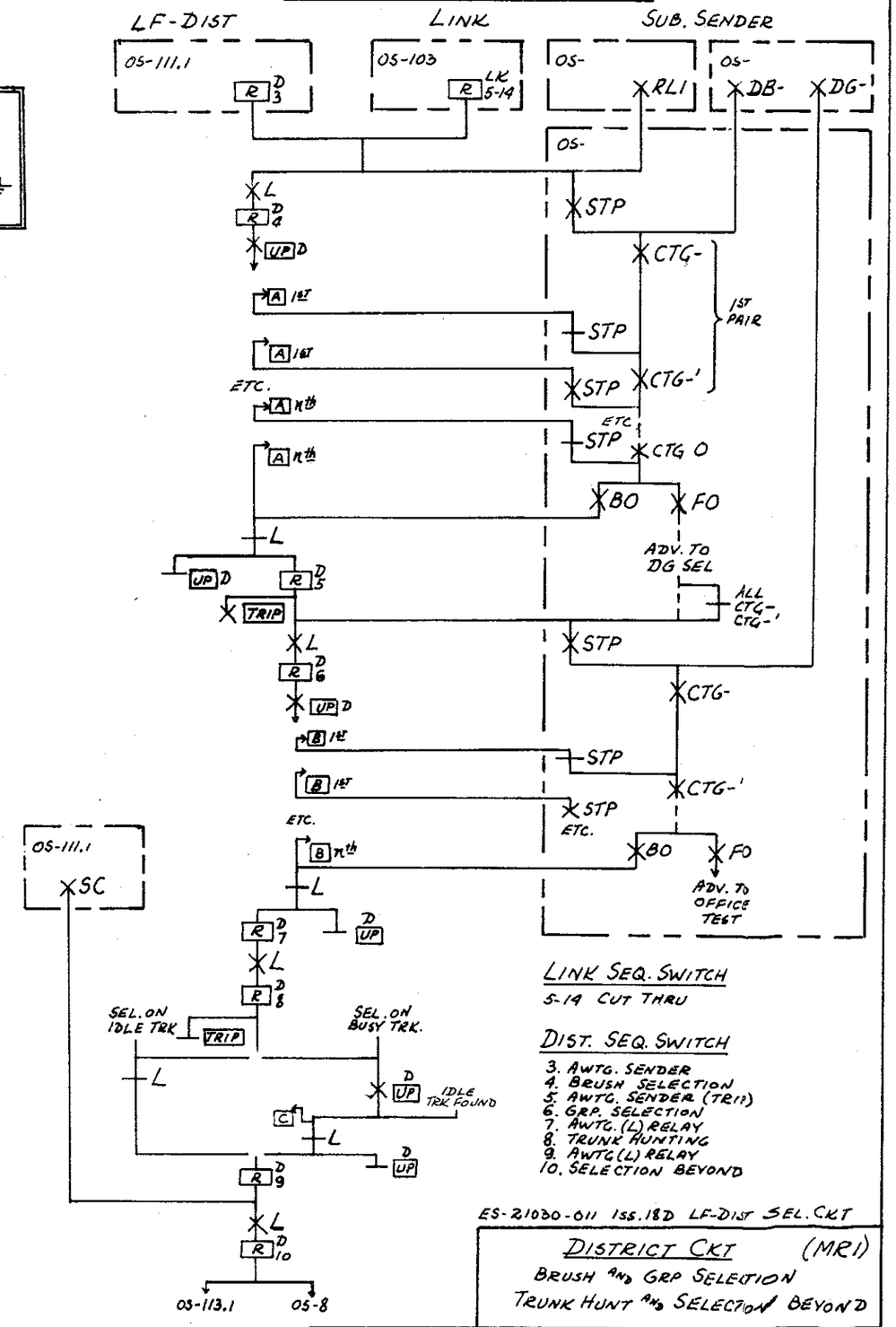

LINK SEQ. SWITCH

S-14 CUT THRU

DIST. SEQ. SWITCH

3. AWTG. SENDER
4. BRUSH SELECTION
5. AWTG. SENDER (TRIP)
6. GRP. SELECTION
7. AWTG. (L) RELAY
8. TRUNK HUNTING
9. AWTG (L) RELAY
10. SELECTION BEYOND

ES-21030-011 ISS. 18D LF-DIST SEL. CKT

DISTRICT CKT (MR1)

BRUSH AND GRP SELECTION
TRUNK HUNT AND SELECTION BEYOND

PANEL GCO	LINK TYPE	OS-112.1

ISSUE	DATE	BY
1	5-58	GHH

ILL. BELL TEL. CO. - PLANT SCHOOL

LF-DIST. SEL. CKT.

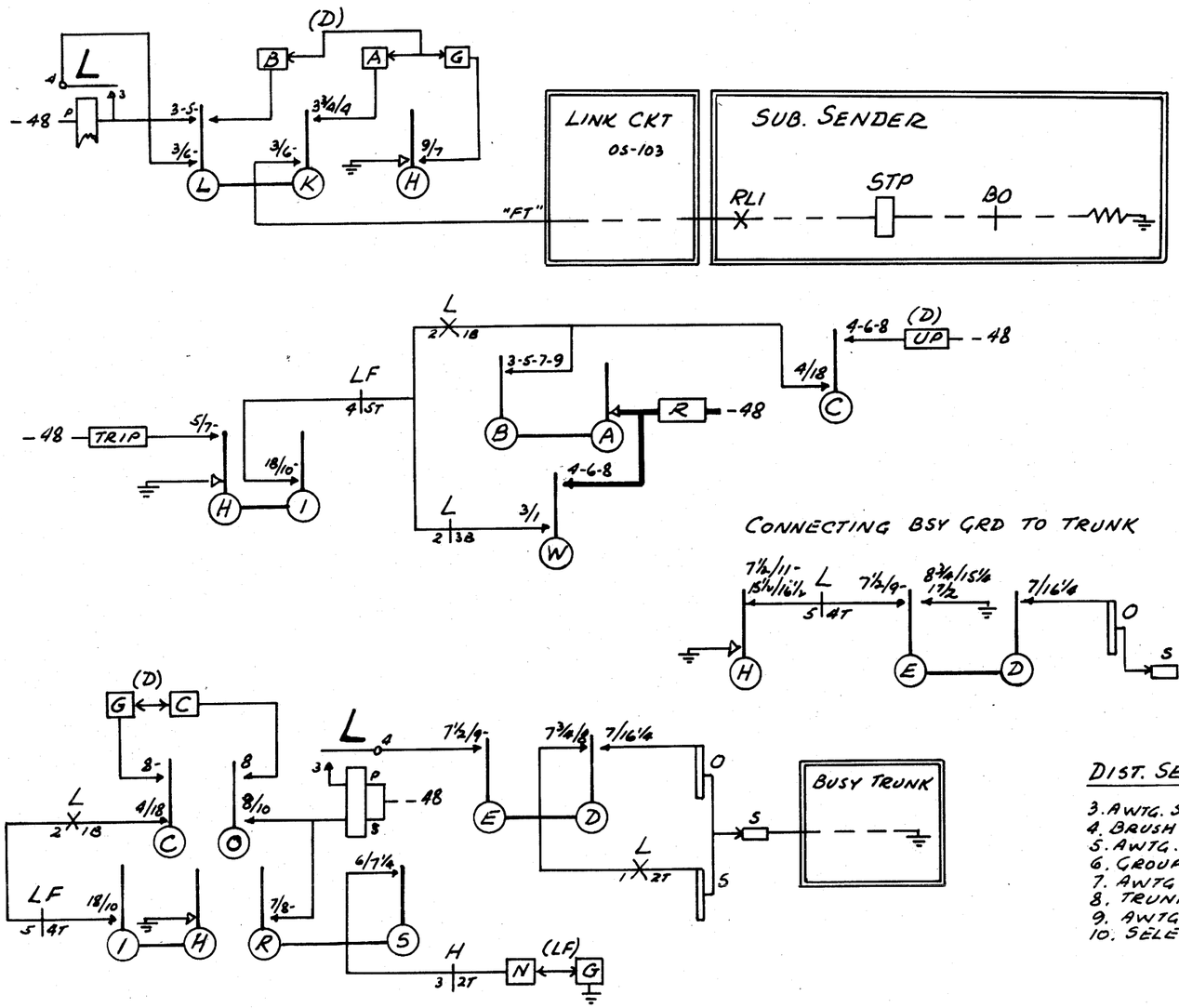

DIST. SEQ. SWITCH

3. AWTG. SENDER
4. BRUSH SELECTION
5. AWTG. SENDER (TRIP)
6. GROUP SELECTION
7. AWTG (L) RELAY
8. TRUNK HUNTING
9. AWTG (L) RELAY
10. SELECTION BEYOND

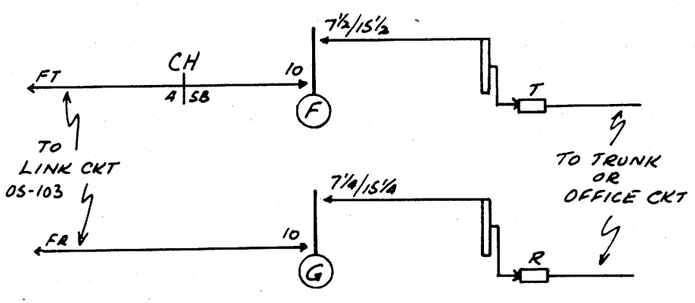

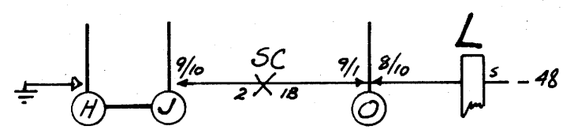

SEQUENCE CHART

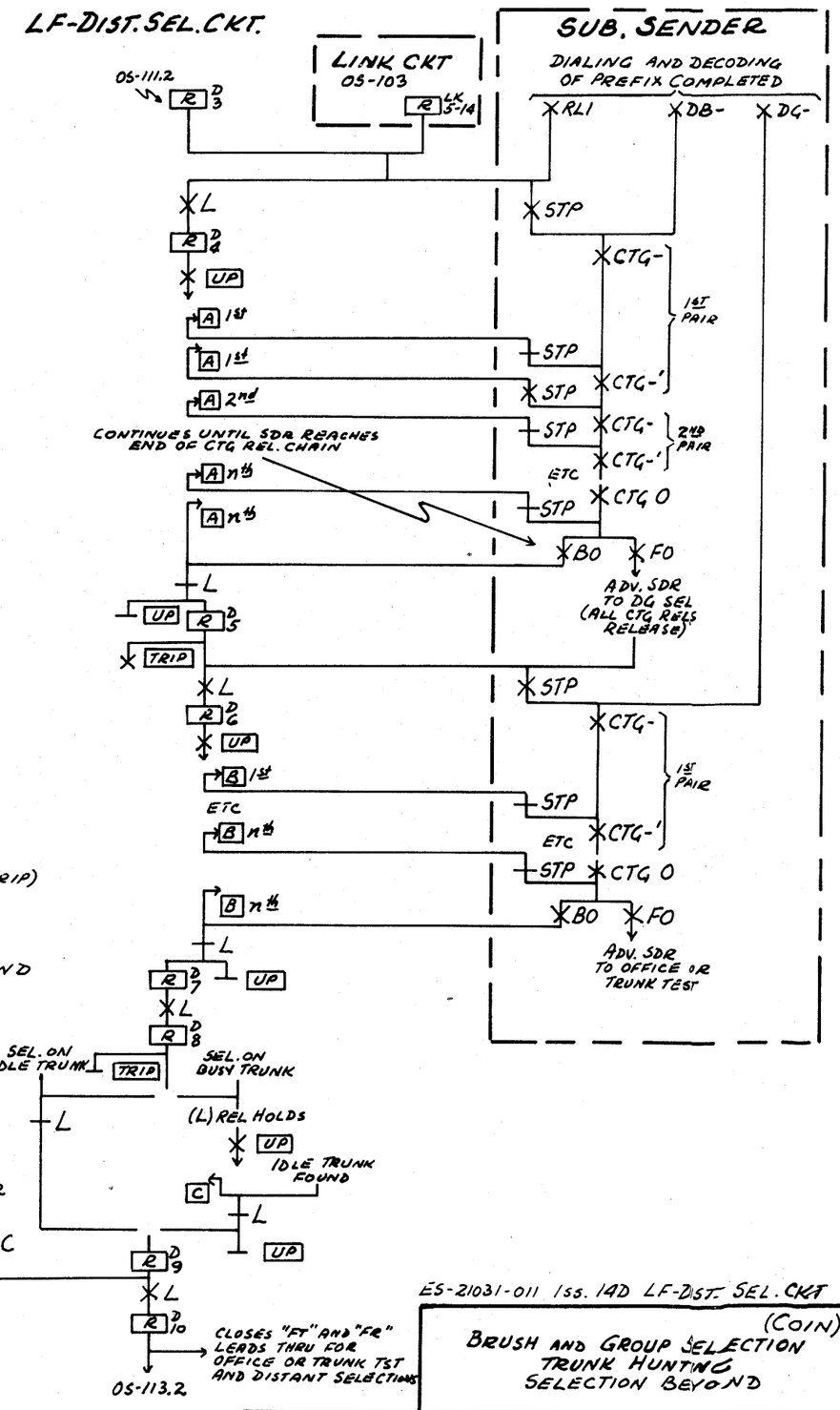

ES-21031-011 Iss. 14D LF-DIST. SEL. CKT

(COIN)

BRUSH AND GROUP SELECTION
TRUNK HUNTING
SELECTION BEYOND

PANEL GCO	LINK TYPE	OS-112.2

ISSUE	DATE	BY
1	10-24	GHH

ILL. BELL TEL. CO — PLANT SCHOOL

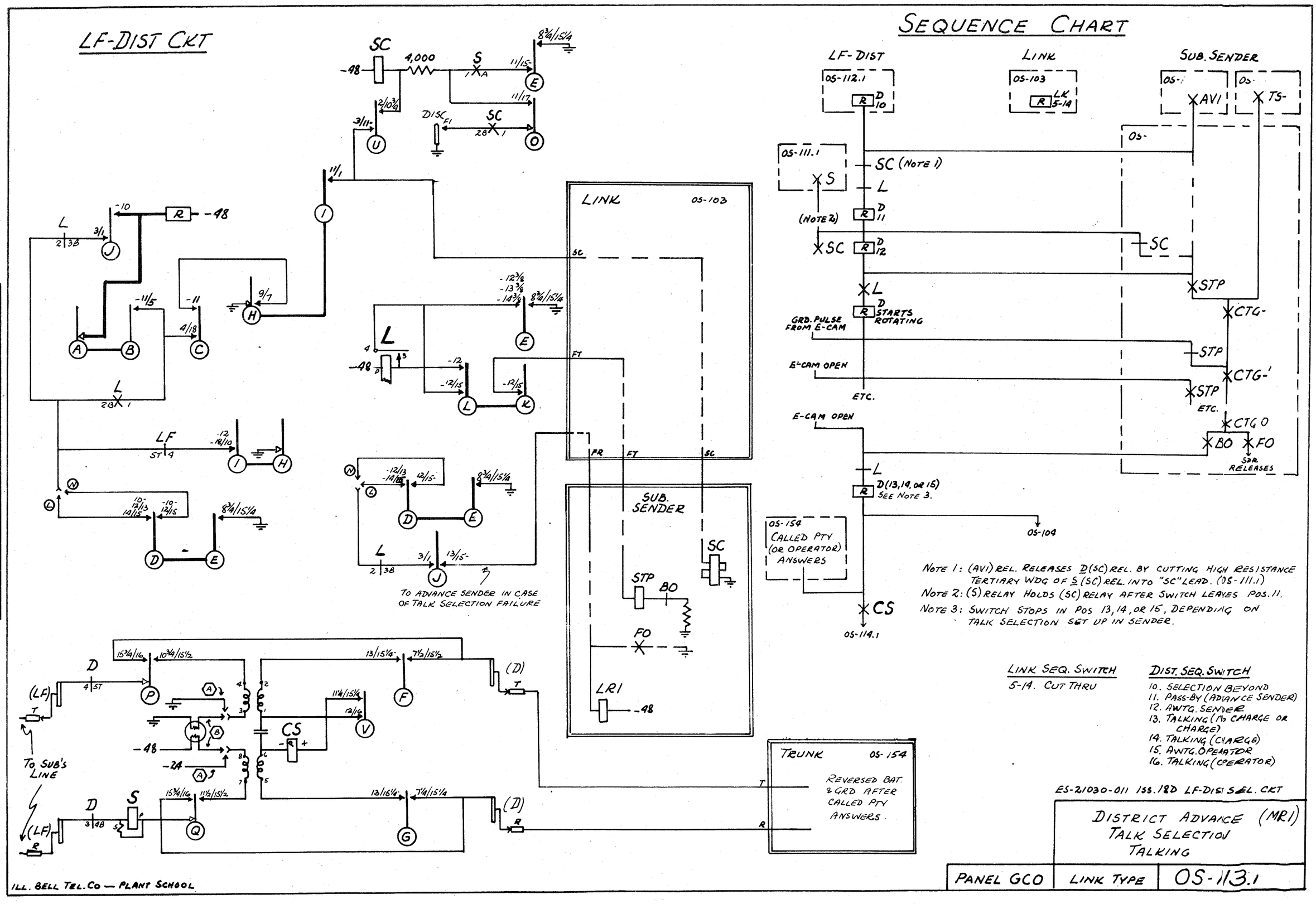
LF-DIST CKT
SEQUENCE CHART
LF-DIST
LINK
SUB. SENDER
OS-112.1
OS-103
OS-111.1
SC (NOTE 1)
(NOTE 2)
STARTS ROTATING
GRD. PULSE FROM E-CAM
E-CAM OPEN
ETC.
D(13,14, OR 15) SEE NOTE 3.
OS-104
OS-154 CALLED PTY (OR OPERATOR) ANSWERS
OS-114.1
STP
CTG-
CTG-'
CTG 0
BO
FO
SDR RELEASES
AVI
TS-
TO ADVANCE SENDER IN CASE OF TALK SELECTION FAILURE
TO SUB'S LINE
TRUNK OS-154
REVERSED BAT. & GRD AFTER CALLED PTY ANSWERS.
LR1
CS
NOTE 1: (AVI) REL. RELEASES D(SC) REL. BY CUTTING HIGH RESISTANCE TERTIARY WDG OF S (SC) REL. INTO "SC" LEAD. (OS-111.1)
NOTE 2: (S) RELAY HOLDS (SC) RELAY AFTER SWITCH LEAVES POS. 11.
NOTE 3: SWITCH STOPS IN POS 13, 14, OR 15, DEPENDING ON TALK SELECTION SET UP IN SENDER.
LINK SEQ. SWITCH
5-14. CUT THRU
DIST. SEQ. SWITCH
10. SELECTION BEYOND
11. PASS-BY (ADVANCE SENDER)
12. AWTG. SENDER
13. TALKING (NO CHARGE OR CHARGE)
14. TALKING (CHARGE)
15. AWTG. OPERATOR
16. TALKING (OPERATOR)
ES-21030-011 ISS. 18D LF-DIST SEL. CKT
DISTRICT ADVANCE (MR1)
TALK SELECTION
TALKING
PANEL GCO
LINK TYPE
OS-113.1
ISSUE 1
DATE 5-54
BY GHH
ILL. BELL TEL. CO — PLANT SCHOOL

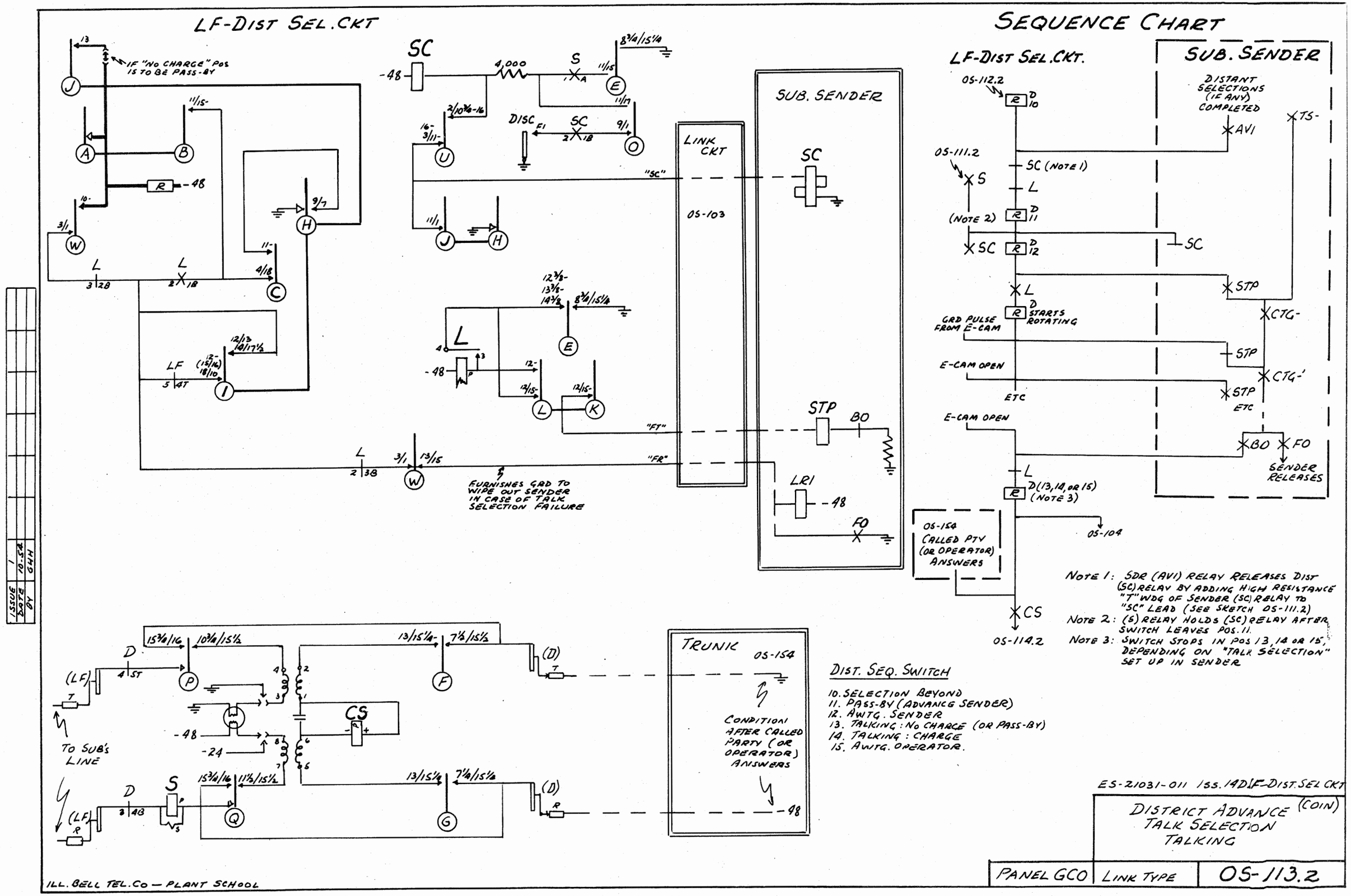
LF-DIST SEL.CKT
SEQUENCE CHART
IF "NO CHARGE" POS IS TO BE PASS-BY
SC
-48
4,000
S
DISC
SC
LINK CKT
OS-103
SUB. SENDER
STP
BO
LR1
FO
"SC"
"FT"
"FR"
FURNISHES GRD TO WIPE OUT SENDER IN CASE OF TALK SELECTION FAILURE
LF-DIST SEL.CKT.
SUB. SENDER
OS-112.2
DISTANT SELECTIONS (IF ANY) COMPLETED
AVI
TS-
OS-111.2
SC (NOTE 1)
(NOTE 2)
STP
CTG-
GRD PULSE FROM E-CAM
STARTS ROTATING
E-CAM OPEN
ETC
SENDER RELEASES
D(13,14,OR 15) (NOTE 3)
OS-154 CALLED PTY (OR OPERATOR) ANSWERS
OS-104
CS
OS-114.2
NOTE 1: SDR (AVI) RELAY RELEASES DIST (SC) RELAY BY ADDING HIGH RESISTANCE "T" WDG OF SENDER (SC) RELAY TO "SC" LEAD (SEE SKETCH OS-111.2)
NOTE 2: (S) RELAY HOLDS (SC) RELAY AFTER SWITCH LEAVES POS. 11.
NOTE 3: SWITCH STOPS IN POS 13, 14 OR 15, DEPENDING ON "TALK SELECTION" SET UP IN SENDER
TO SUB'S LINE
-24
TRUNK
OS-154
CONDITION AFTER CALLED PARTY (OR OPERATOR) ANSWERS
DIST. SEQ. SWITCH
10. SELECTION BEYOND
11. PASS-BY (ADVANCE SENDER)
12. AWTG. SENDER
13. TALKING: NO CHARGE (OR PASS-BY)
14. TALKING: CHARGE
15. AWTG. OPERATOR.
ES-21031-011 ISS. 14D LF-DIST. SEL CKT
DISTRICT ADVANCE (COIN)
TALK SELECTION
TALKING
PANEL GCO
LINK TYPE
OS-113.2
ILL. BELL TEL. CO — PLANT SCHOOL
ISSUE 1
DATE 10-5-24
BY CHH

LF-DIST. SEL. CKT

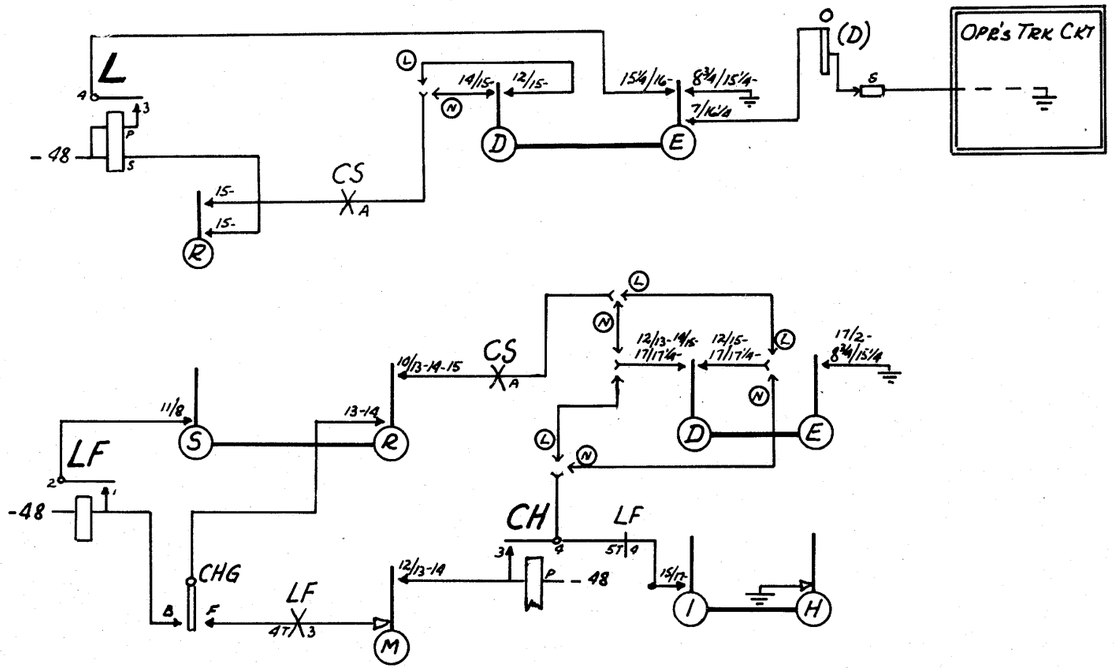

SEQUENCE CHART

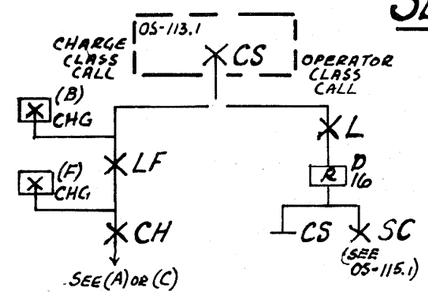

(A) LOCAL CHARGE (NON-OVERTIME)

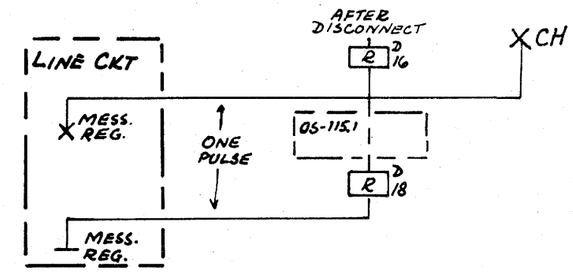

(B) REMOTE CONTROL ZONE CHARGE

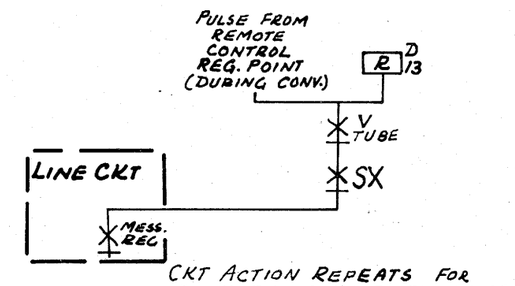

CKT ACTION REPEATS FOR EACH PULSE RECEIVED FROM REMOTE CONTROL REG. POINT

(C) LOCAL OVERTIME CHARGE

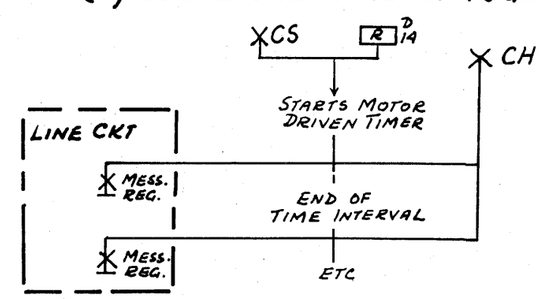

DIST. SEQ. SWITCH

13. TALKING
14. "
15. AWTG OPERATOR
16. TALKING (OPERATOR) } MR PERIOD
17. OVERFLOW

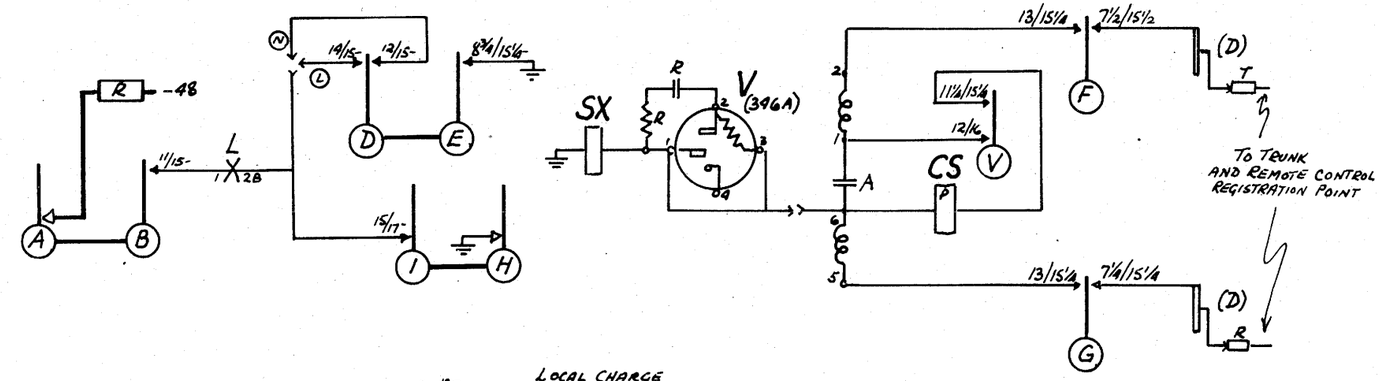

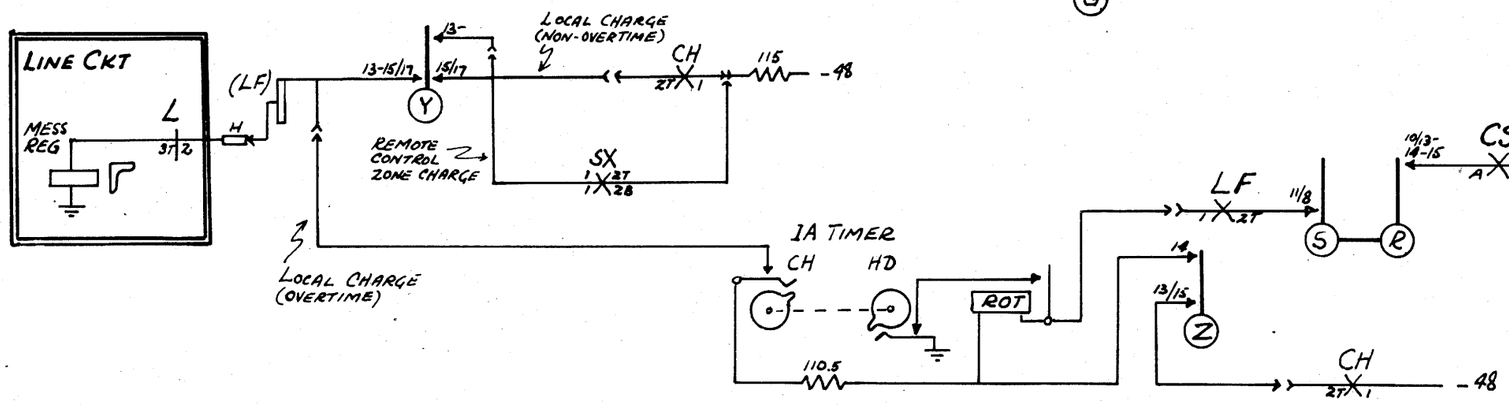

ES-20298-011 Iss. 3A AR LINE CKT
ES-21030-011 Iss. 18-D LF-DIST SEL. CKT

MRJ

CHARGING

PANEL GCO	LINK TYPE	OS-14.1

ISSUE 1
DATE 3-53
BY GHH

ILL. BELL TEL. CO. – PLANT SCHOOL

LF-DIST. SEL. CKT

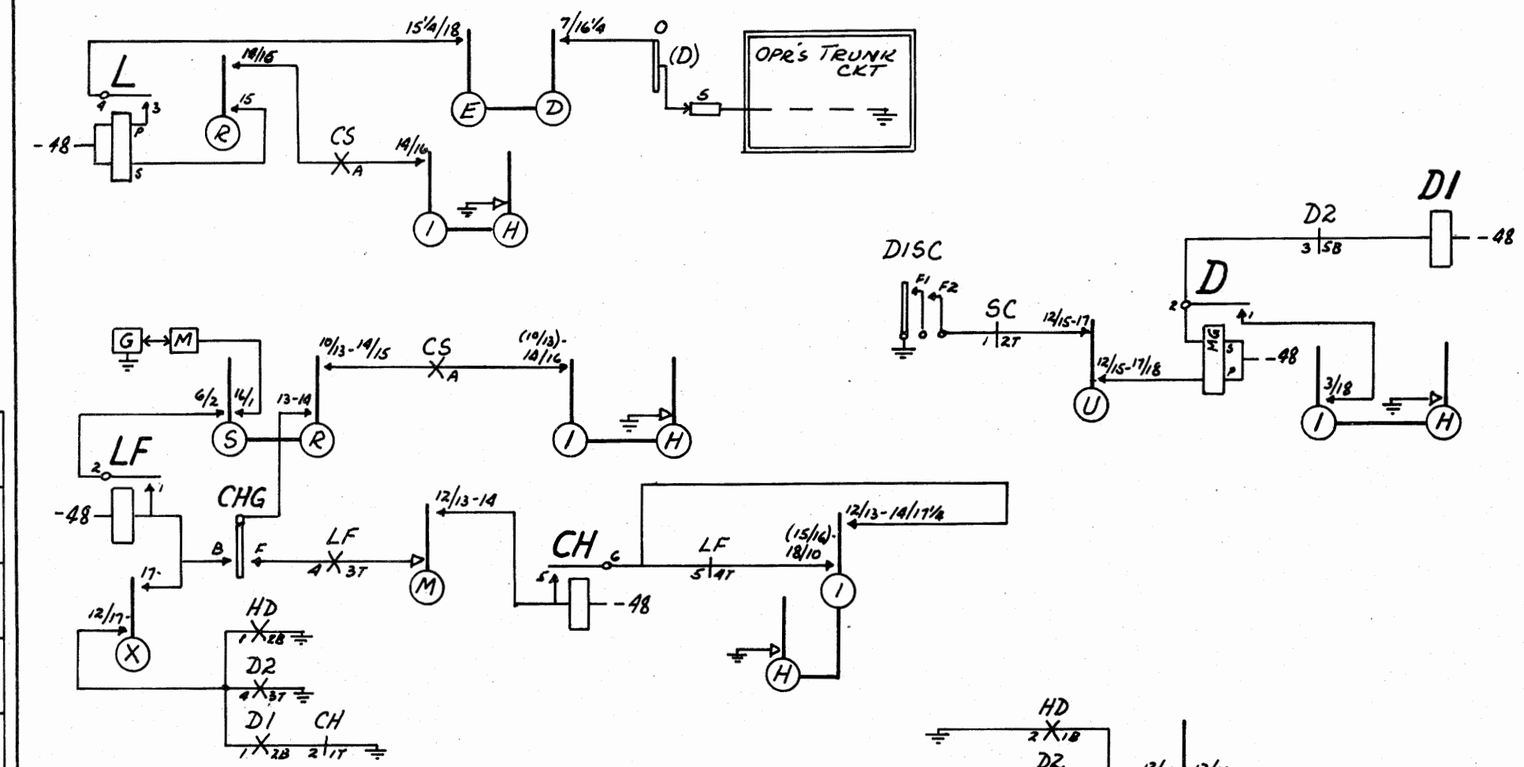

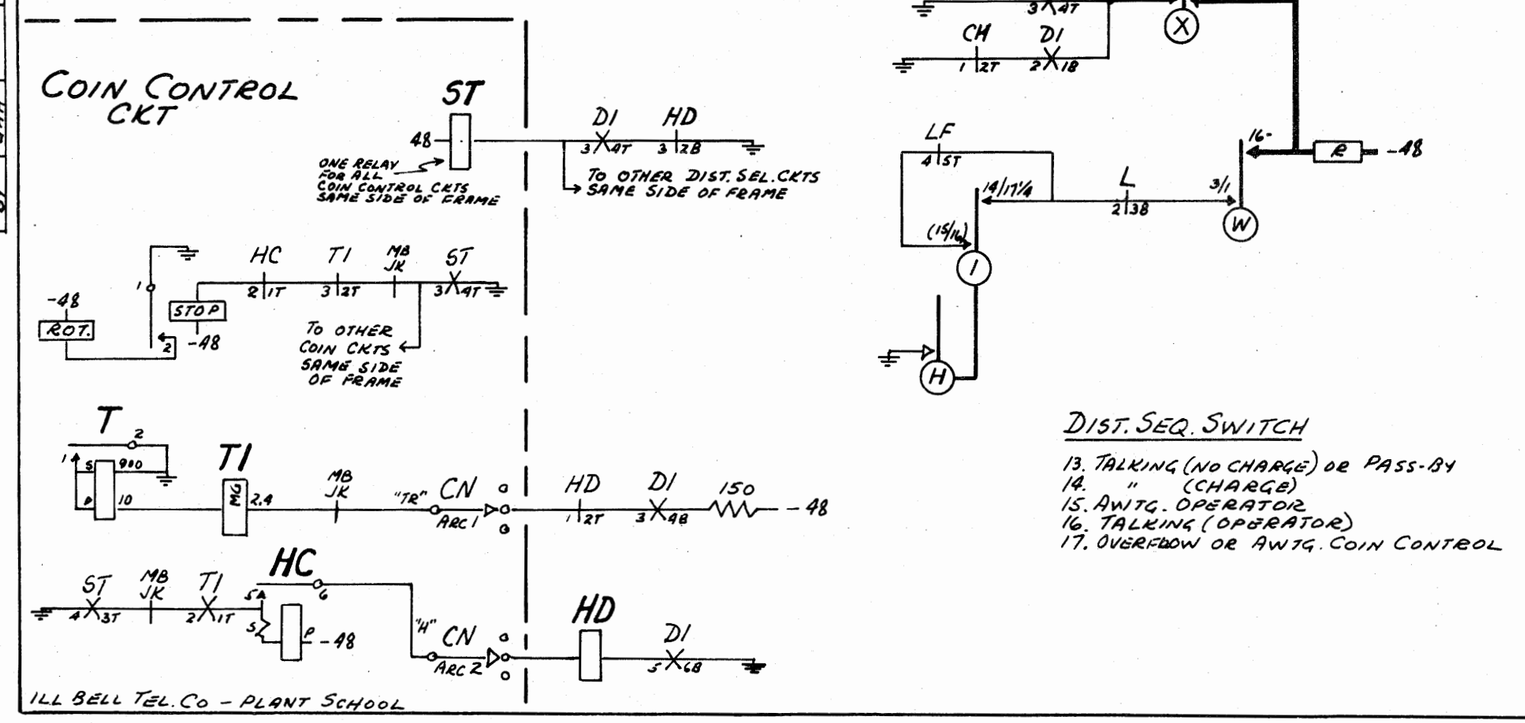

DIST. SEQ. SWITCH

13. TALKING (NO CHARGE) OR PASS-BY
14. " (CHARGE)
15. AWTG. OPERATOR
16. TALKING (OPERATOR)
17. OVERFLOW OR AWTG. COIN CONTROL

SEQUENCE CHART

LF-DIST. SEL. CKT.

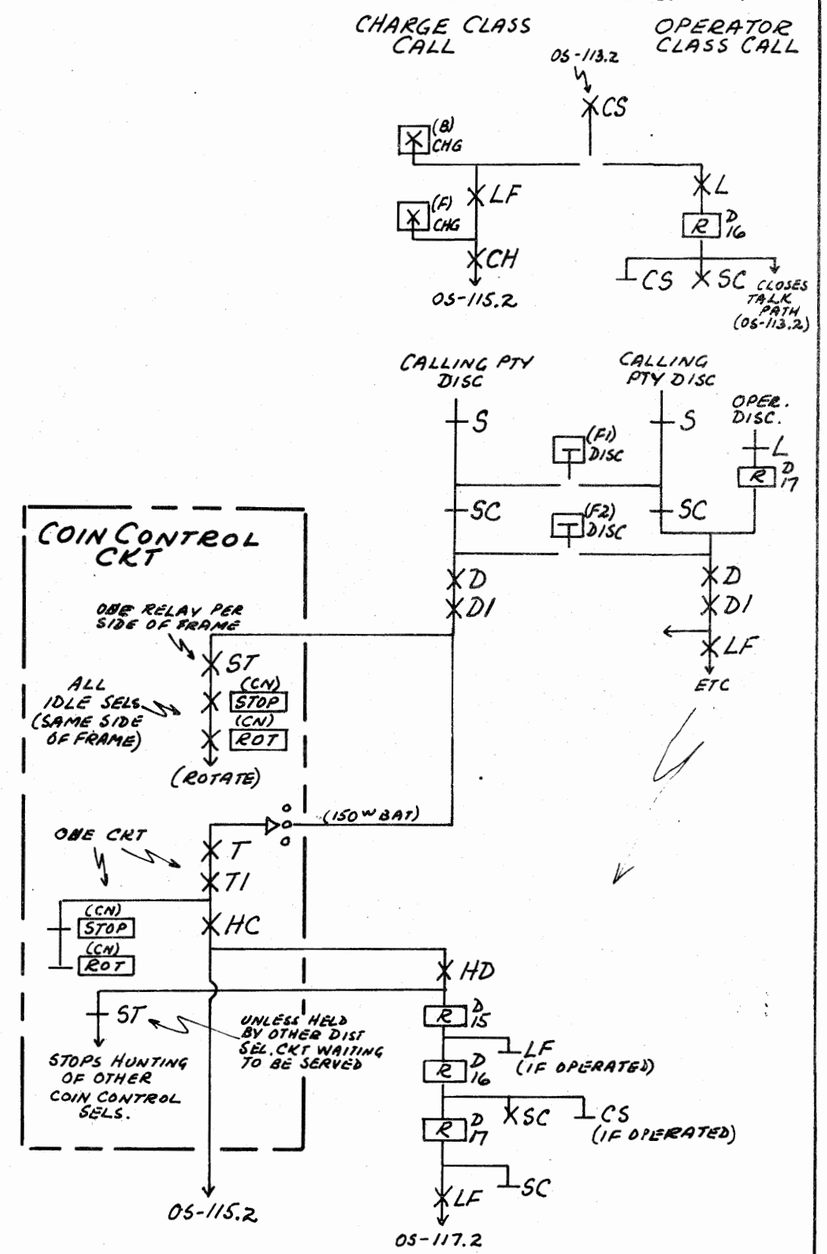

ES-21031-011 1SS. 1AD LF-DIST. SEL. CKT

ISSUE	DATE	BY
1	10-54	GHH

(COIN)
SETTING UP CHARGE CONDITION
CALLING PARTY DISC.
COIN CONTROL HUNTS DISTRICT

PANEL GCO	LINK TYPE	OS-114.2

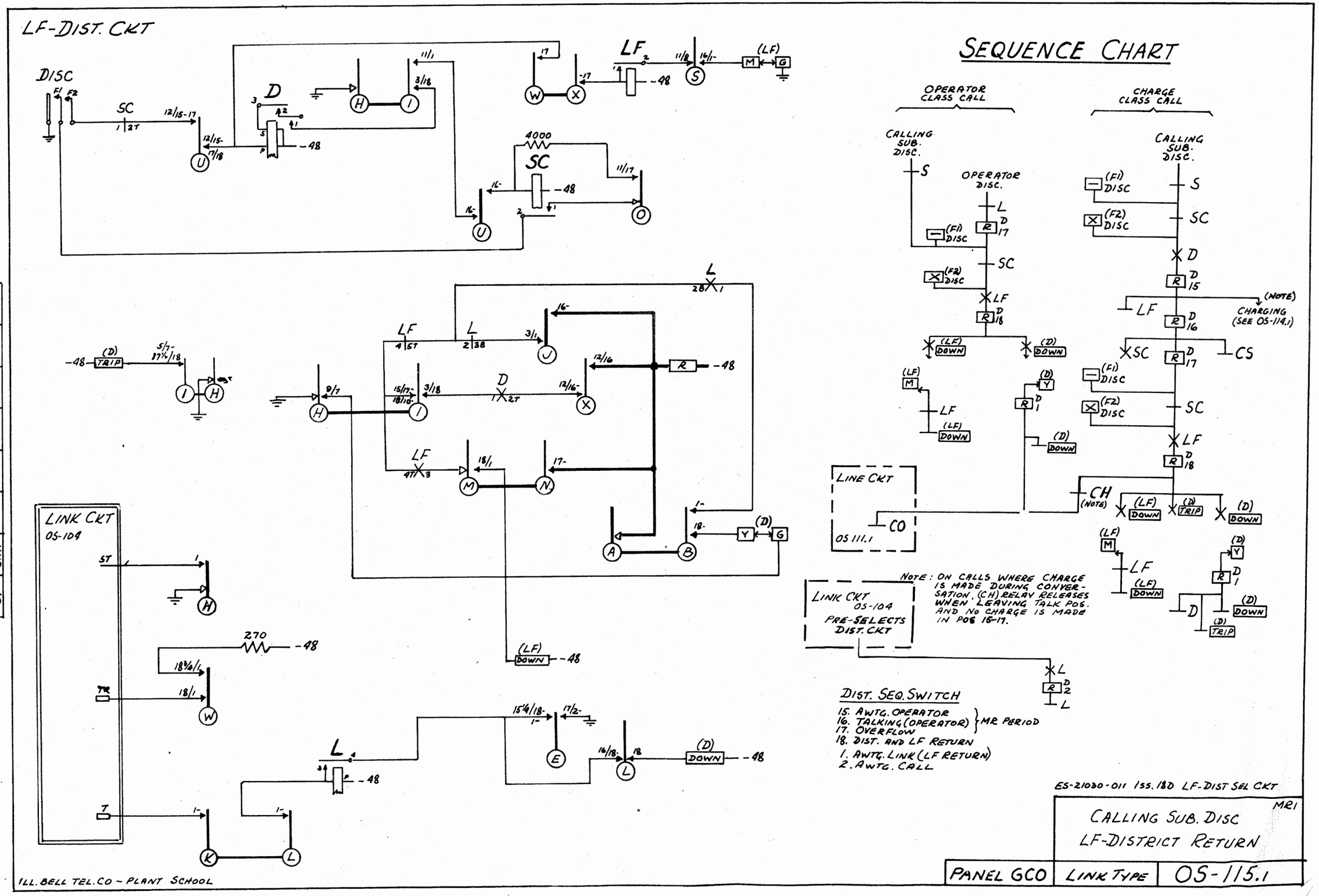
LF-DIST. CKT
SEQUENCE CHART
DISC
SC
D
LF
(LF)
4000
SC
OPERATOR CLASS CALL
CHARGE CLASS CALL
CALLING SUB. DISC.
OPERATOR DISC.
(F1) DISC
(F2) DISC
(LF) DOWN
(D) DOWN
(D) TRIP
(NOTE)
CHARGING (SEE OS-114.1)
CS
CH
LINE CKT
CO
OS 111.1
LINK CKT
OS-104
PRE-SELECTS DIST. CKT
NOTE: ON CALLS WHERE CHARGE IS MADE DURING CONVERSATION, (CH) RELAY RELEASES WHEN LEAVING TALK POS. AND NO CHARGE IS MADE IN POS 16-17.
DIST. SEQ. SWITCH
15. AWTG. OPERATOR
16. TALKING (OPERATOR)
17. OVERFLOW
MR PERIOD
18. DIST. AND LF RETURN
1. AWTG. LINK (LF RETURN)
2. AWTG. CALL
LINK CKT
OS-104
TRIP
270
ES-21030-011 ISS. 18D LF-DIST SEL CKT
MR1
CALLING SUB. DISC
LF-DISTRICT RETURN
PANEL GCO
LINK TYPE
OS-115.1
ILL. BELL TEL. CO - PLANT SCHOOL
ISSUE
DATE
BY

COIN CONTROL CKT

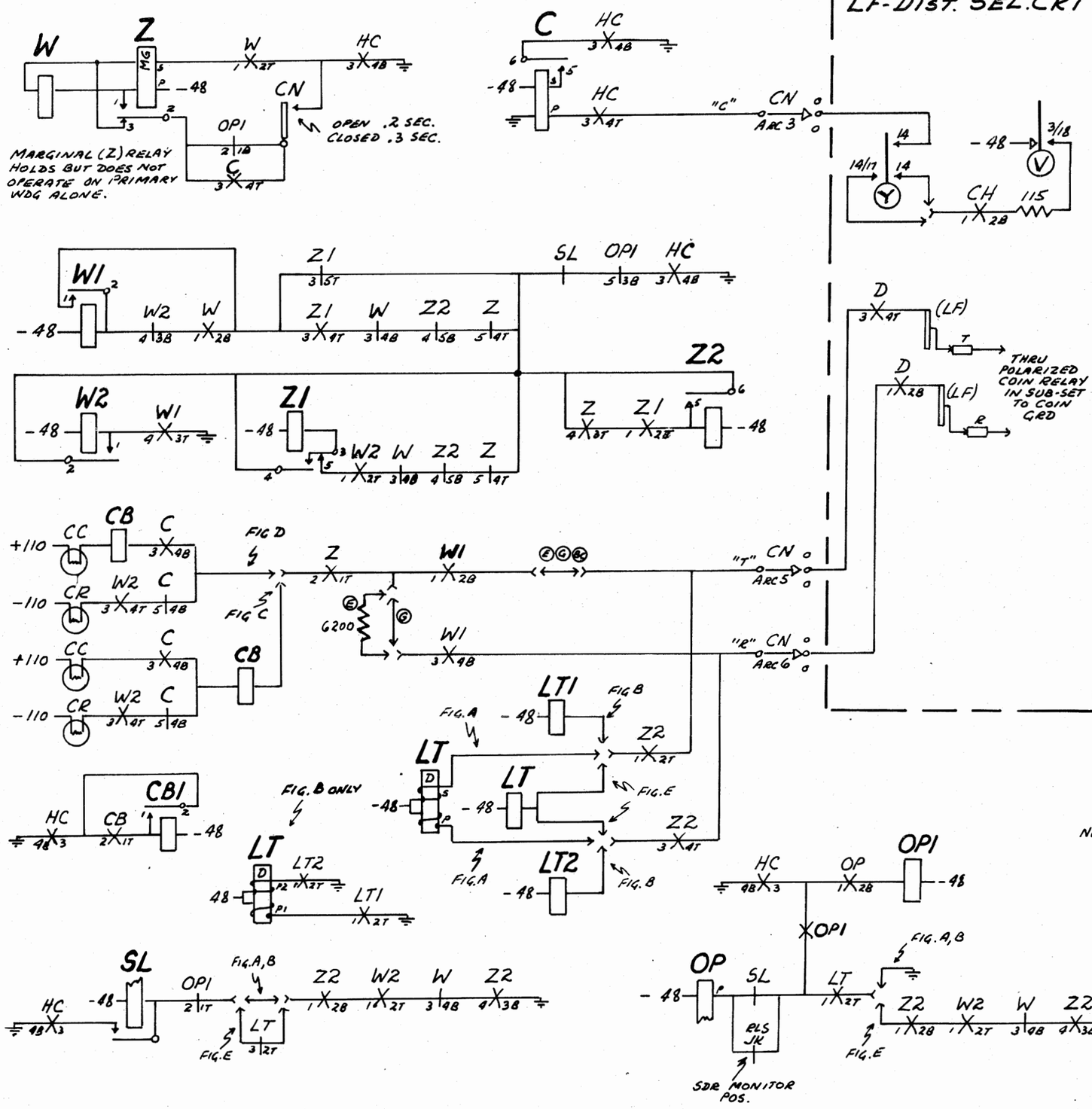

LF-DIST. SEL. CKT

SEQUENCE CHART

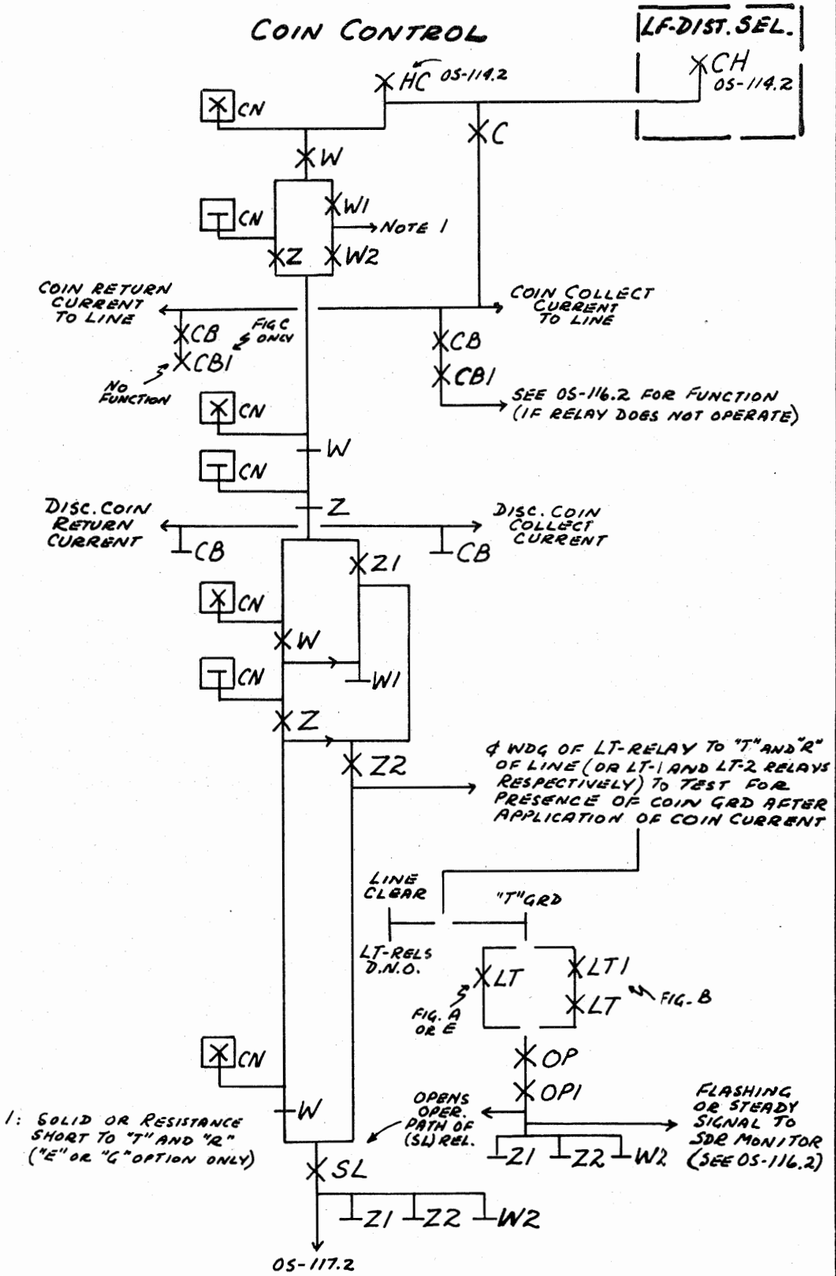

NOTE 1: SOLID OR RESISTANCE SHORT TO "T" AND "R" ("E" OR "G" OPTION ONLY)

ISSUE	DATE	BY
1	10-54	GHH

ES-21031-011 ISS. 1AD LF-DIST SEL CKT

(COIN)

COIN COLLECT AND RETURN LINE TEST

PANEL GCO	LINK TYPE	OS-115.2

ILL. BELL TEL. CO — PLANT SCHOOL

COIN CONTROL CKT

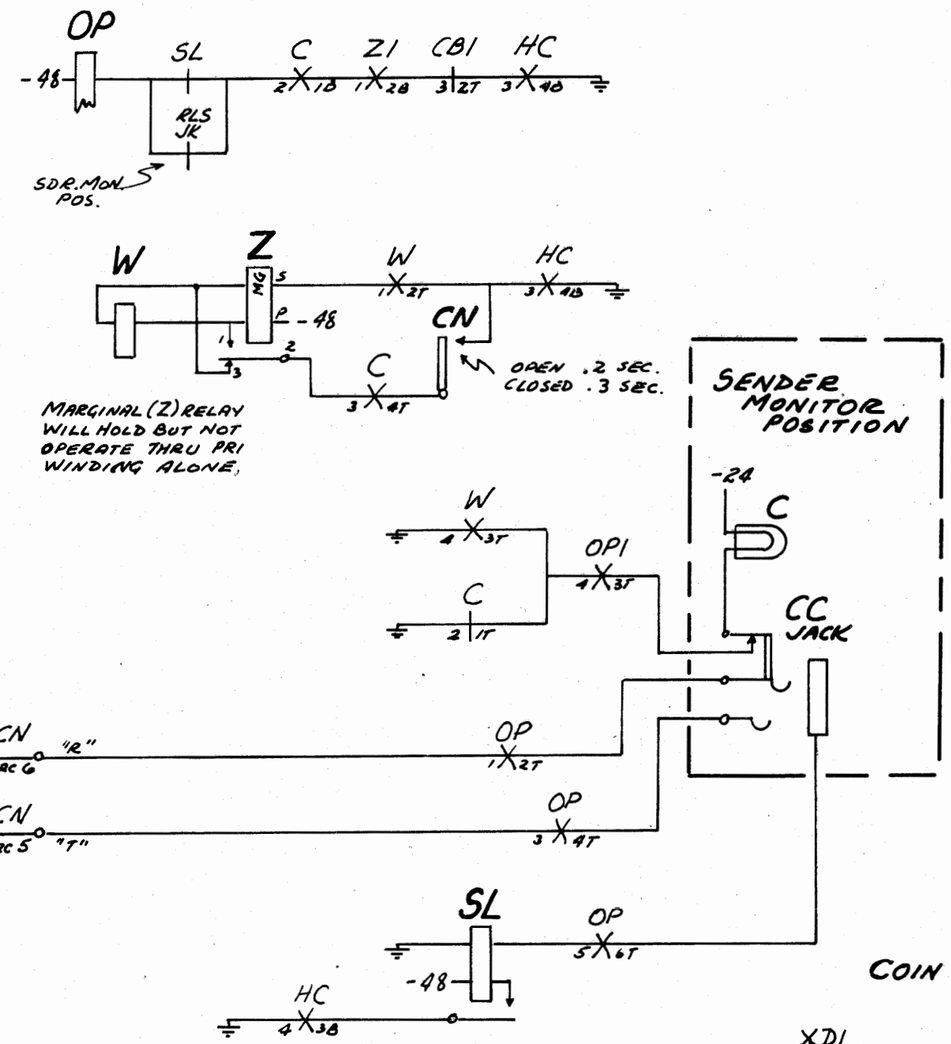

SEQUENCE CHART

COIN CONTROL CKT

(A) (CB) RELAY FAILS TO OPERATE DURING APPLICATION OF COIN CURRENT (INDICATING NO COIN PRESENT)

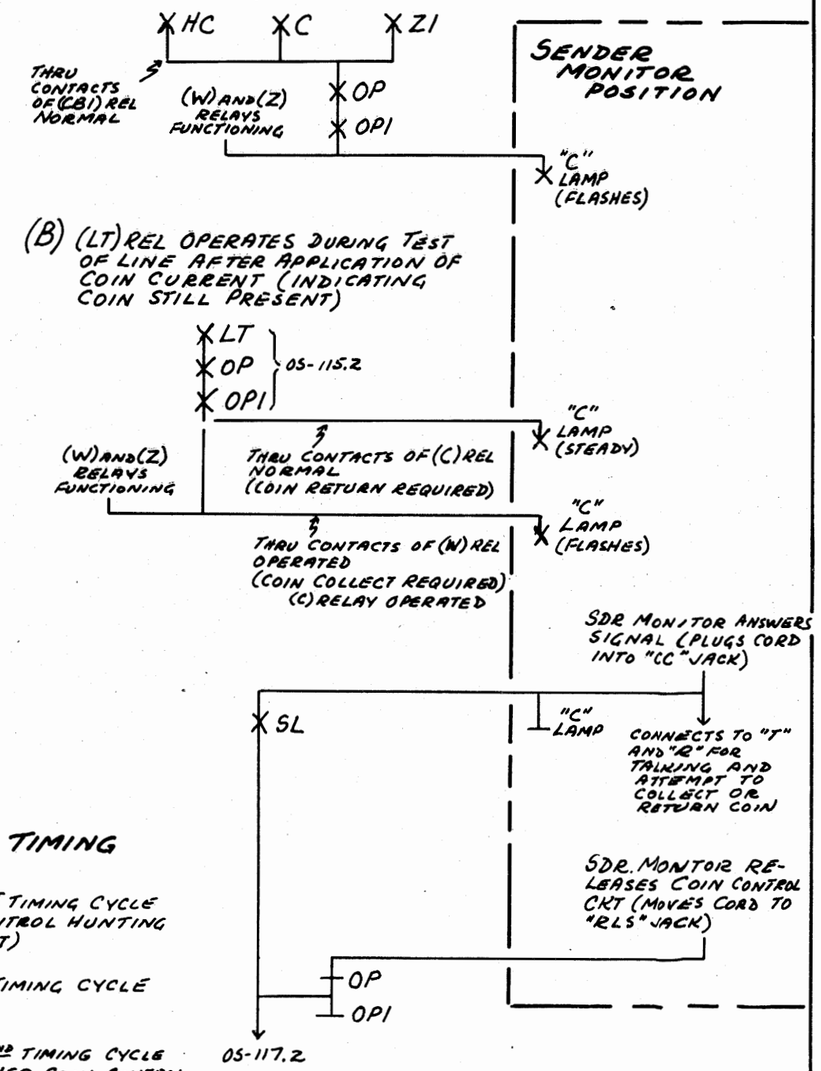

(B) (LT) REL OPERATES DURING TEST OF LINE AFTER APPLICATION OF COIN CURRENT (INDICATING COIN STILL PRESENT)

COIN CONTROL TIMING

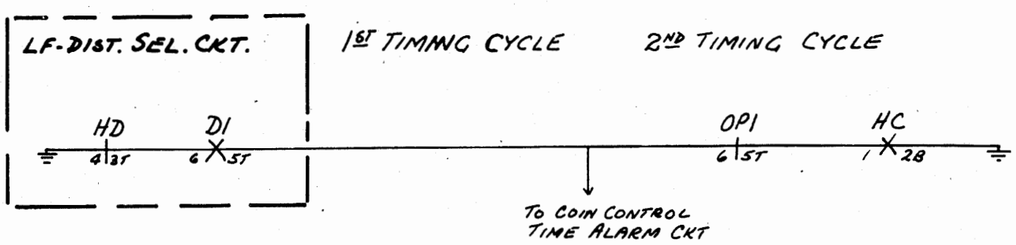

- DI → STARTS 1ST TIMING CYCLE (COIN CONTROL HUNTING DISTRICT)
- HD → ENDS 1ST TIMING CYCLE
- HC → STARTS 2ND TIMING CYCLE (ALL OTHER COIN CONTROL FUNCTIONS)
- HC → ENDS 2ND TIMING CYCLE
- OP1 → CANCELS TIMING (ROUTED TO SDR MONITOR)

ES-21031-011 ISS.14D COIN CONTROL & LF-DIST SEL. CKT

(COIN)

COIN SIGNALS TO SDR. MONITOR
COIN CONTROL TIME ALARM

PANEL GCO	LINK TYPE	OS-116.2

ISSUE	DATE	BY
1	10-54	GHH

ILL. BELL TEL. CO – PLANT SCHOOL

SEQUENCE CHART

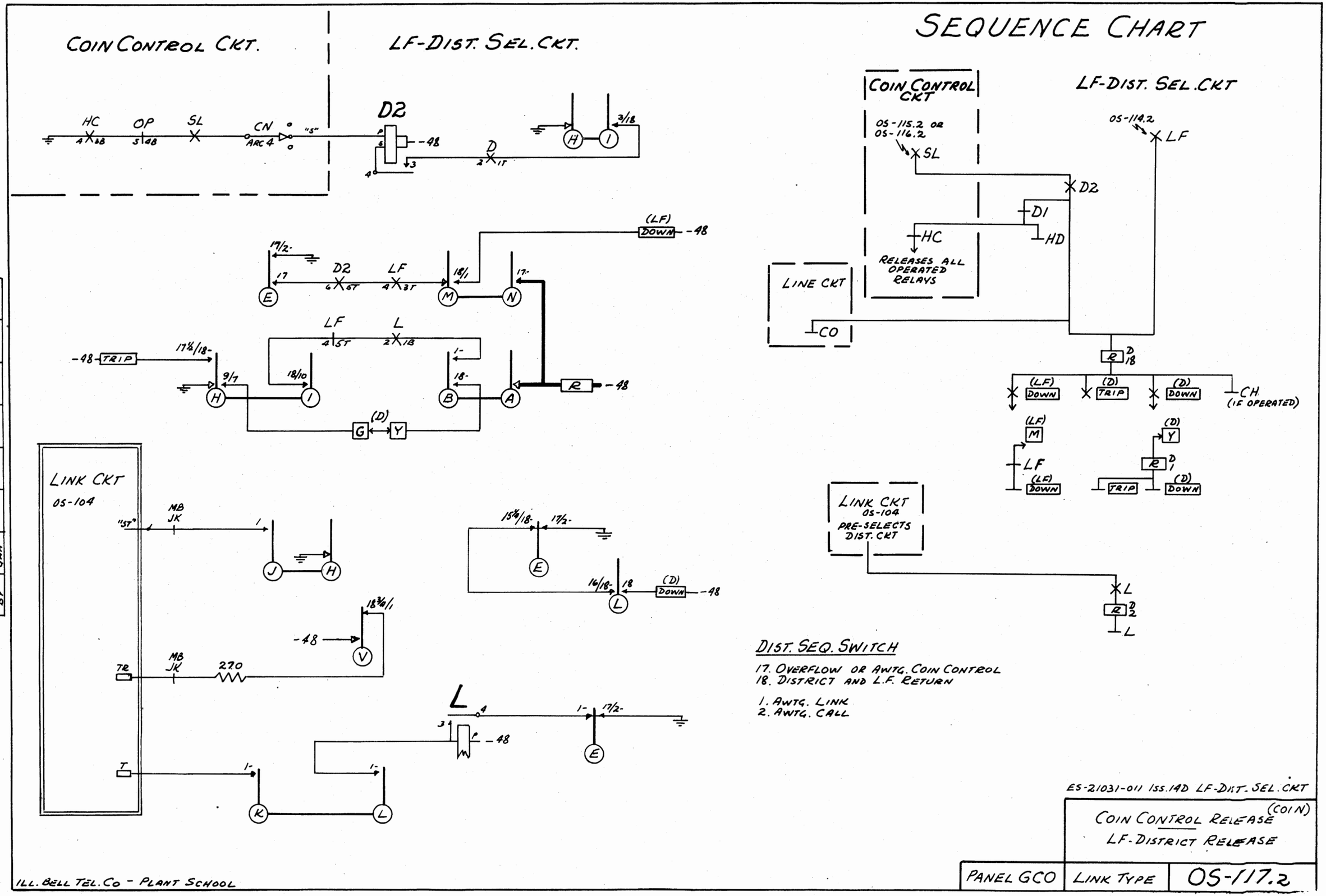

OS PAGE	CIRCUIT FUNCTION	SW. POS. R2	SW. POS. R1
121.1	SENDER SEIZED ; DIAL TONE	1	1
122.1	DIALING	1	1
123.1(A)	CONNECTING TO DECODER CONNECTOR	2	8
123.1(B)	SENDING INFORMATION TO DECODER	2	8
123.1(C)	DECODING PREFIX	2	8
124.1	SETTING R-3 CLASS SWITCH	2	9
125.1	DISTRICT BRUSH SELECTION	2	9
	" GROUP "	4	9
126.1	OFFICE TEST	6	9
	" BRUSH SELECTION	7	9
	" GROUP "	9	9
127.1	TRUNK TEST	11	9
128.1	INCOMING BRUSH SELECTION	12	9
	" GROUP "	14	9
129.1	FINAL BRUSH SELECTION	16	10
	" TENS "	16	12
	" UNITS "	16	14
130.1	INCOMING ADVANCE	16	16
131.1(A)	PC1 PULSING - FUNDAMENTAL CIRCUIT	16	15
131.1(B)	" " - POSITIVE PULSES		
131.1(C)	" " - NEGATIVE "		
132.1	DISTRICT ADVANCE ; TALK SELECTION	16	18
133.1	SENDER RELEASE		
134.1	REGISTER RESTORAL		
135.1	"M" REG. FUNCTION; SYNCHRONIZING (S) RELAY		

ISSUE	DATE	BY
1	12-54	GHH

ES-20012-02 SUBSCRIBER'S SENDER NON-ZONE

COIN OR NON-COIN

INDEX TO OPERATIONAL SKETCHES

PANEL GCO

SEL. TYPE WITH LINK & DECODER

OS-120.1

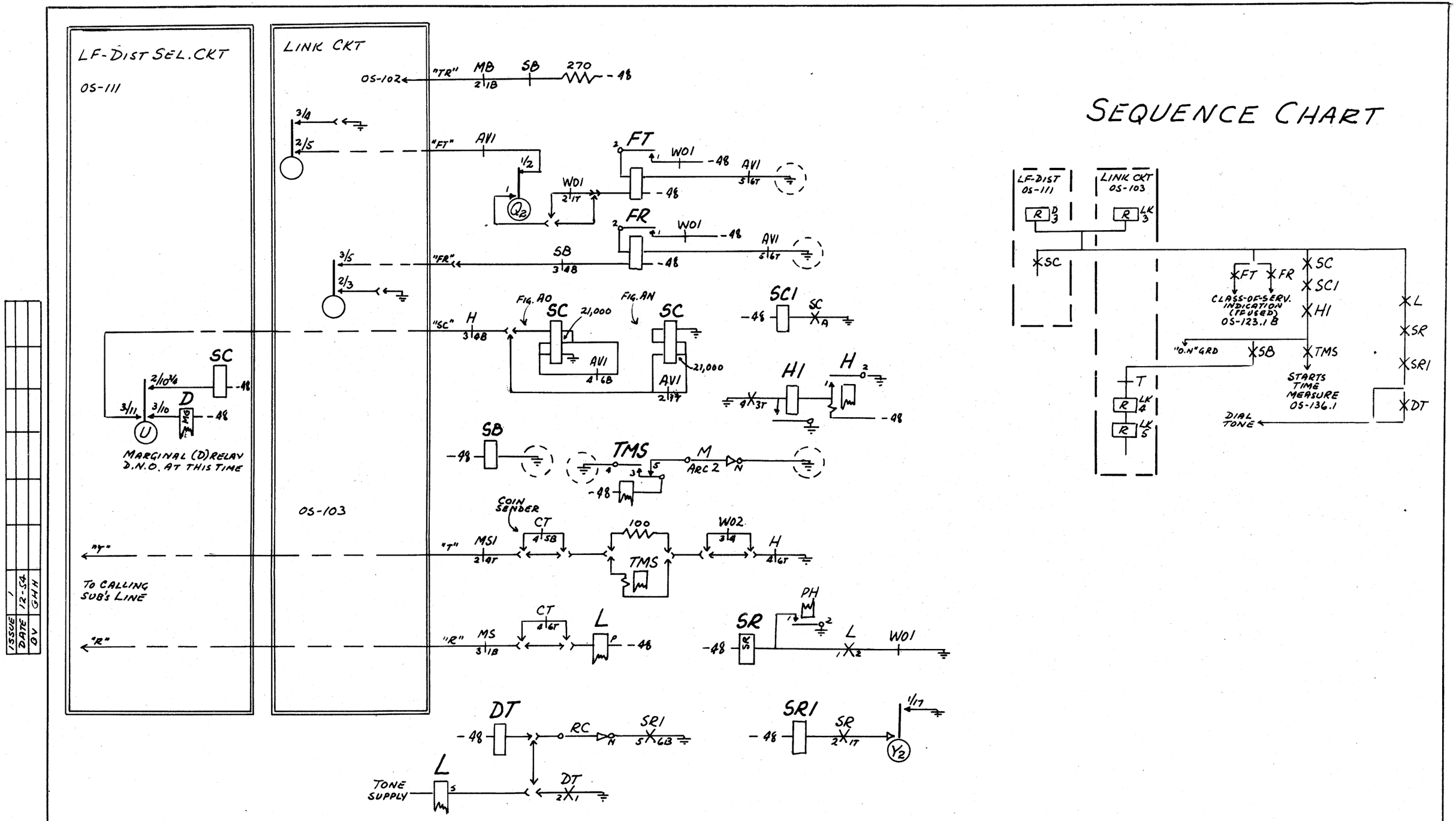

ES-20012-02 /SS. 10D SUBSCRIBER'S SDR NON-ZONE

COIN OR NON-COIN

SENDER SEIZED — DIAL TONE

R2-1 R1-1

PANEL GCO | SEL. TYPE WITH LINK & DECODER | OS-121.1

ISSUE	DATE	BY
1	12-54	GHH

ILL. BELL TEL. CO. – PLANT SCHOOL

SEQUENCE CHART

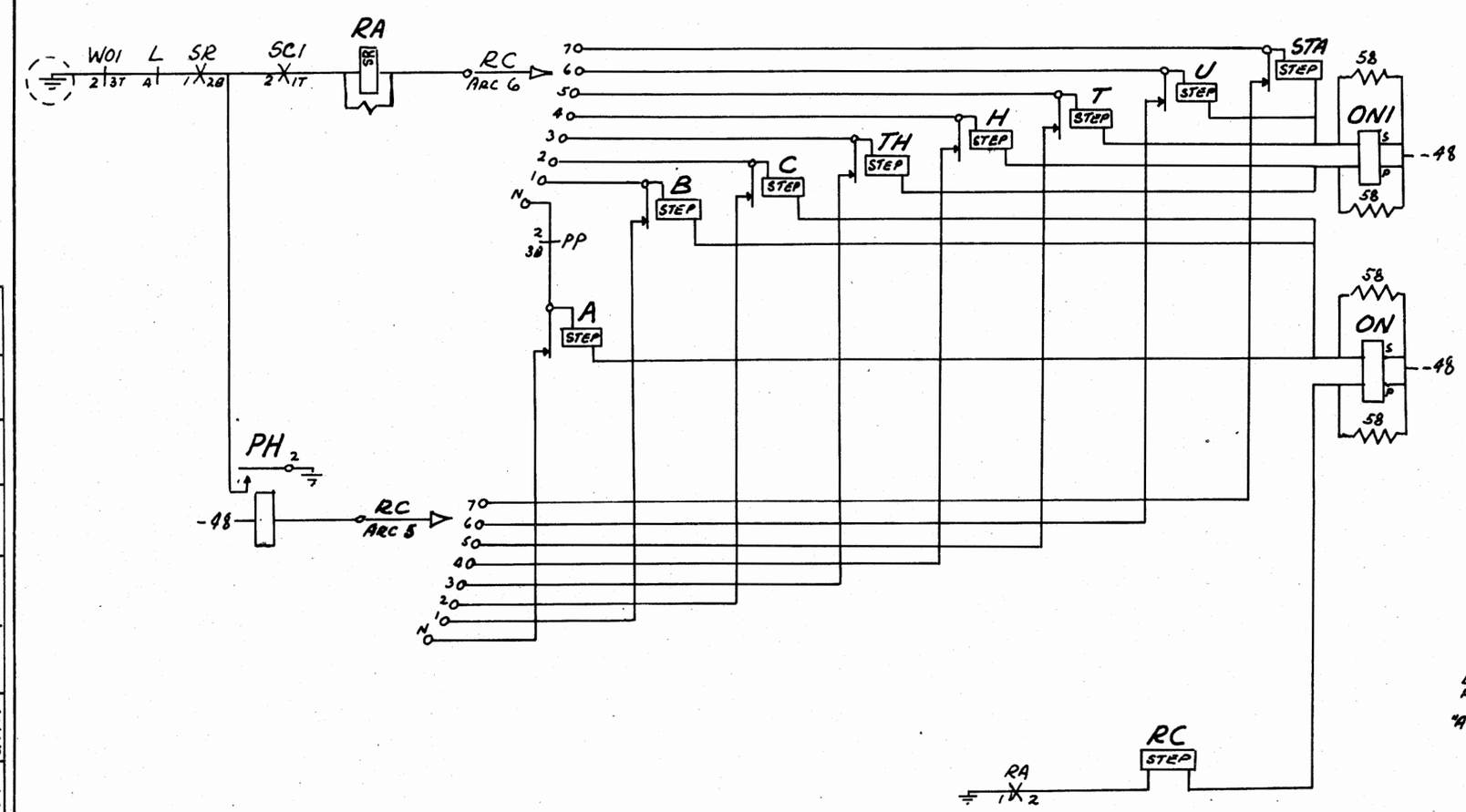

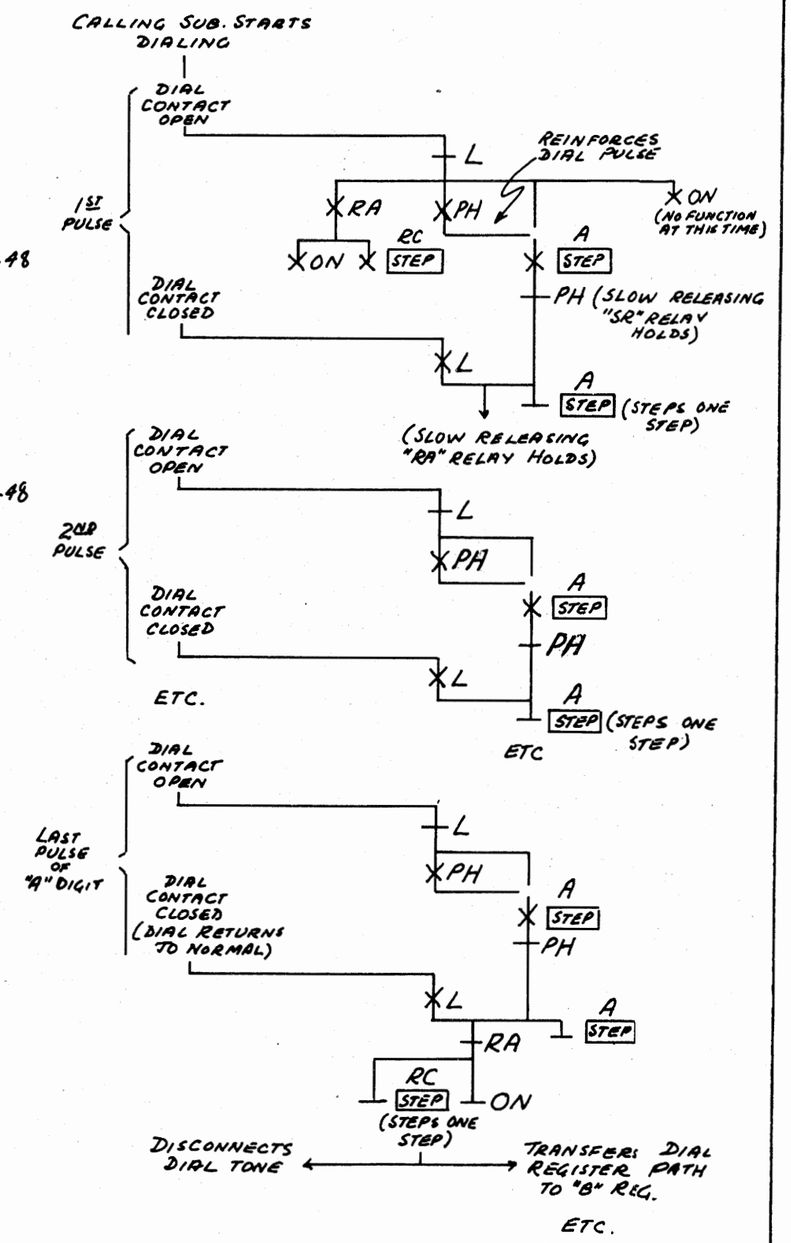

ES-20012-02 ISS. 10D SUBSCRIBER'S SENDER NON-ZONE COIN OR NON-COIN

DIALING

PANEL GCO	SEL. TYPE WITH LINK & DECODER	05-122.1

ISSUE	1
DATE	12-54
BY	GHH

ILL. BELL TEL. CO - PLANT SCHOOL

SEQUENCE CHART

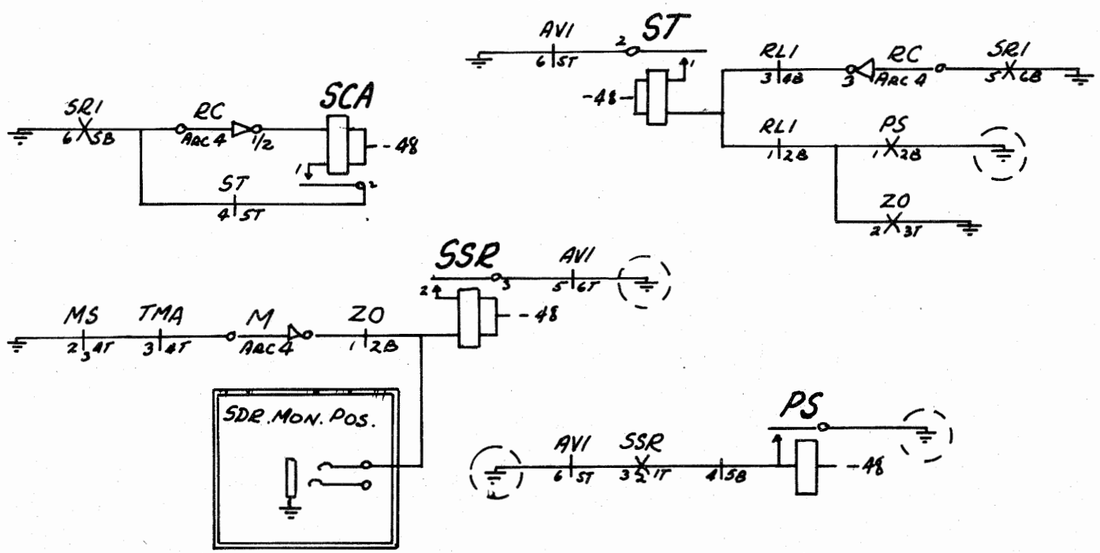

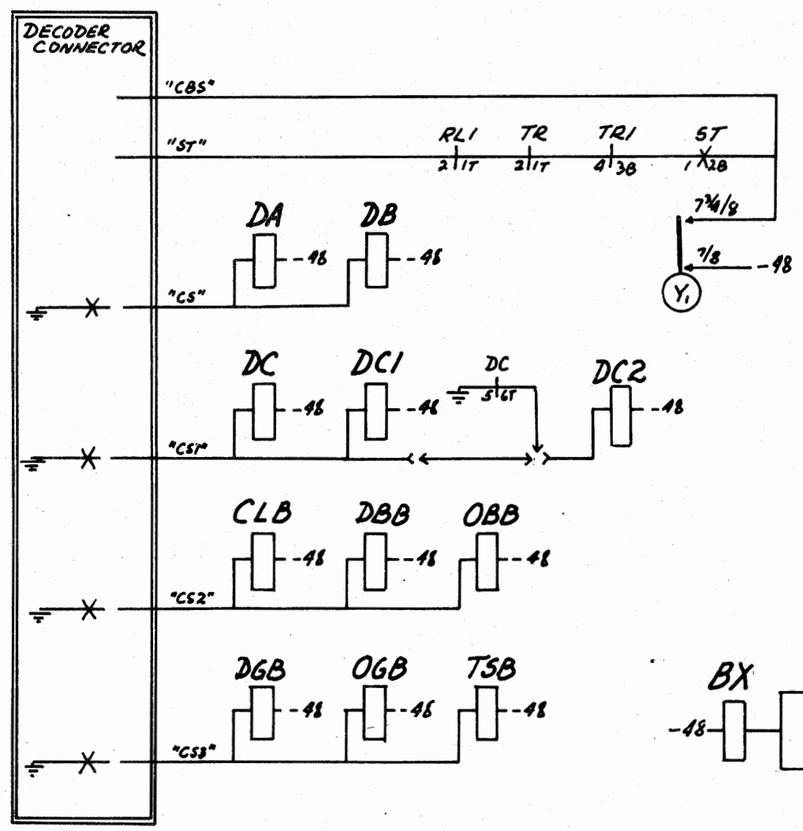

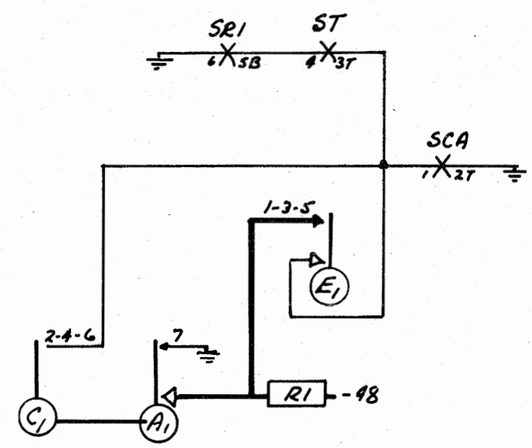

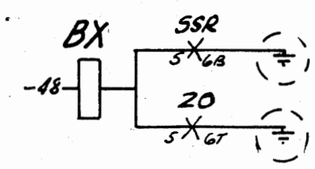

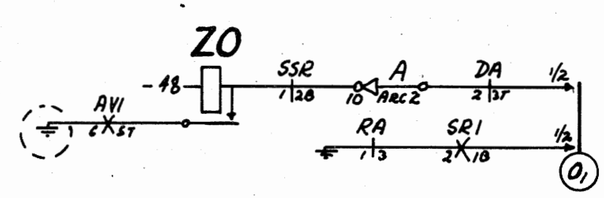

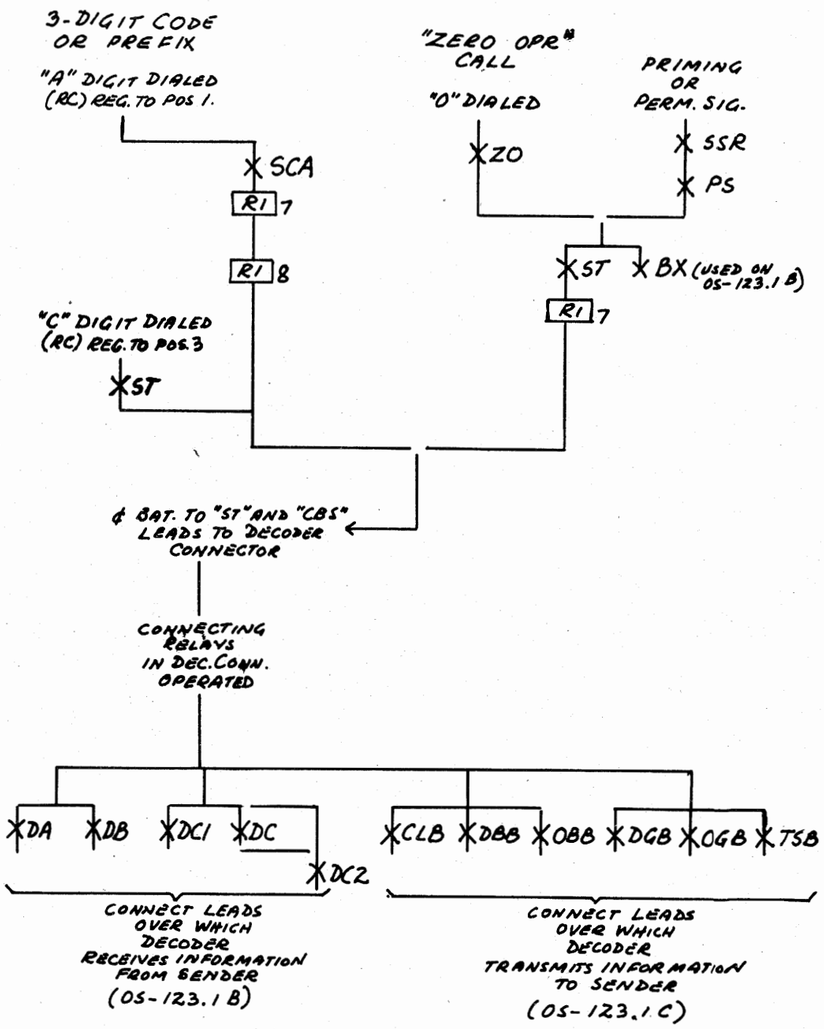

ISSUE	1	
DATE	12-52	
BY	GHH	

ES-20012-02 Iss. 10D SUBSCRIBER'S SENDER NON-ZONE

COIN OR NON-COIN

CONNECTING TO DECODER CONNECTOR R_2-2 R_1-8

PANEL GCO	SEL. TYPE WITH LINK & DECODER	OS-123.1 (A)

ILL. BELL TEL. CO – PLANT SCHOOL

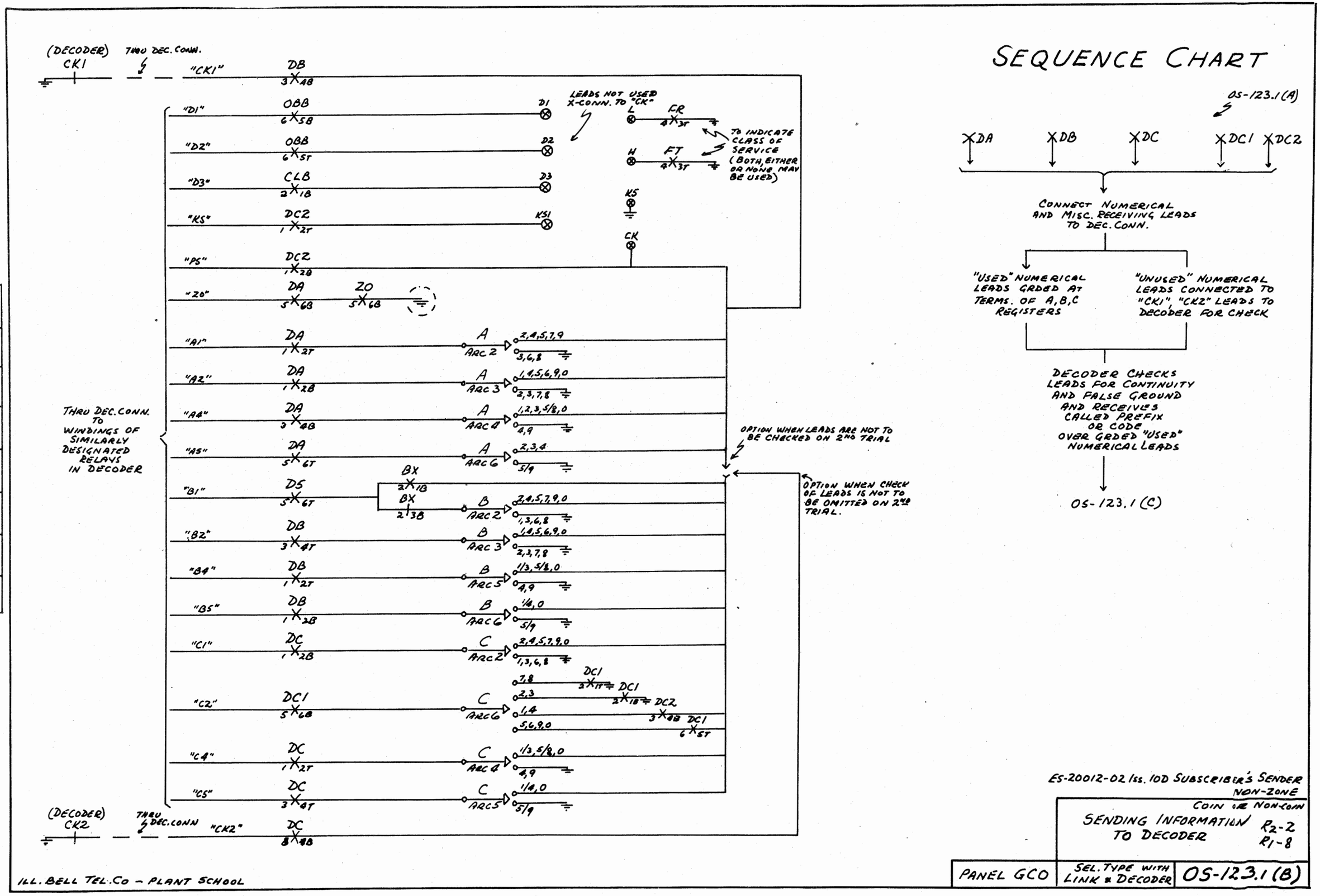
SEQUENCE CHART
(DECODER) CK1
THRU DEC. CONN.
"CK1"
DB 3X4B
"D1" OBB 6X5B D1
"D2" OBB 6X5T D2
"D3" CLB 2X1B D3
"KS" DC2 1X2T KS1
"PS" DC2 1X2B
"ZO" DA 5X6B ZO 5X6B
"A1" DA 1X2T A ARC 2 2,4,5,7,9 3,6,8
"A2" DA 1X2B A ARC 3 1,4,5,6,9,0 2,3,7,8
"A4" DA 3X4B A ARC 4 1,2,3,5/8,0 4,9
"A5" DA 5X6T A ARC 6 2,3,4 5/9
"B1" DS 5X6T BX 2X1B BX 2X3B B ARC 2 2,4,5,7,9,0 1,3,6,8
"B2" DB 3X4T B ARC 3 1,4,5,6,9,0 2,3,7,8
"B4" DB 1X2T B ARC 5 1/3,5/8,0 4,9
"B5" DB 1X2B B ARC 6 1/4,0 5/9
"C1" DC 1X2B C ARC 2 2,4,5,7,9,0 1,3,6,8
"C2" DC1 5X6B C ARC 6 7,8 2,3 1,4 5,6,9,0 DC1 2X11 DC1 2X18 DC2 3X4B DC1 6X5T
"C4" DC 1X2T C ARC 4 1/3,5/8,0 4,9
"C5" DC 3X4T C ARC 5 1/4,0 5/9
(DECODER) CK2
THRU DEC. CONN
"CK2" DC 8X4B
LEADS NOT USED X-CONN. TO "CK"
L FR 4X3T
H FT 4X3T
TO INDICATE CLASS OF SERVICE (BOTH, EITHER OR NONE MAY BE USED)
KS
CK
THRU DEC. CONN. TO WINDINGS OF SIMILARLY DESIGNATED RELAYS IN DECODER
OPTION WHEN LEADS ARE NOT TO BE CHECKED ON 2ND TRIAL
OPTION WHEN CHECK OF LEADS IS NOT TO BE OMITTED ON 2ND TRIAL.
OS-123.1 (A)
DA DB DC DC1 DC2
CONNECT NUMERICAL AND MISC. RECEIVING LEADS TO DEC. CONN.
"USED" NUMERICAL LEADS GRDED AT TERMS. OF A,B,C REGISTERS
"UNUSED" NUMERICAL LEADS CONNECTED TO "CK1", "CK2" LEADS TO DECODER FOR CHECK
DECODER CHECKS LEADS FOR CONTINUITY AND FALSE GROUND AND RECEIVES CALLED PREFIX OR CODE OVER GRDED "USED" NUMERICAL LEADS
OS-123.1 (C)
ES-20012-02 Iss. 10D SUBSCRIBER'S SENDER NON-ZONE
COIN OR NON-COIN
SENDING INFORMATION TO DECODER
R2-2 R1-8
PANEL GCO
SEL. TYPE WITH LINK & DECODER
OS-123.1 (B)
ILL. BELL TEL. CO – PLANT SCHOOL
ISSUE 1
DATE 12-54
BY GHH

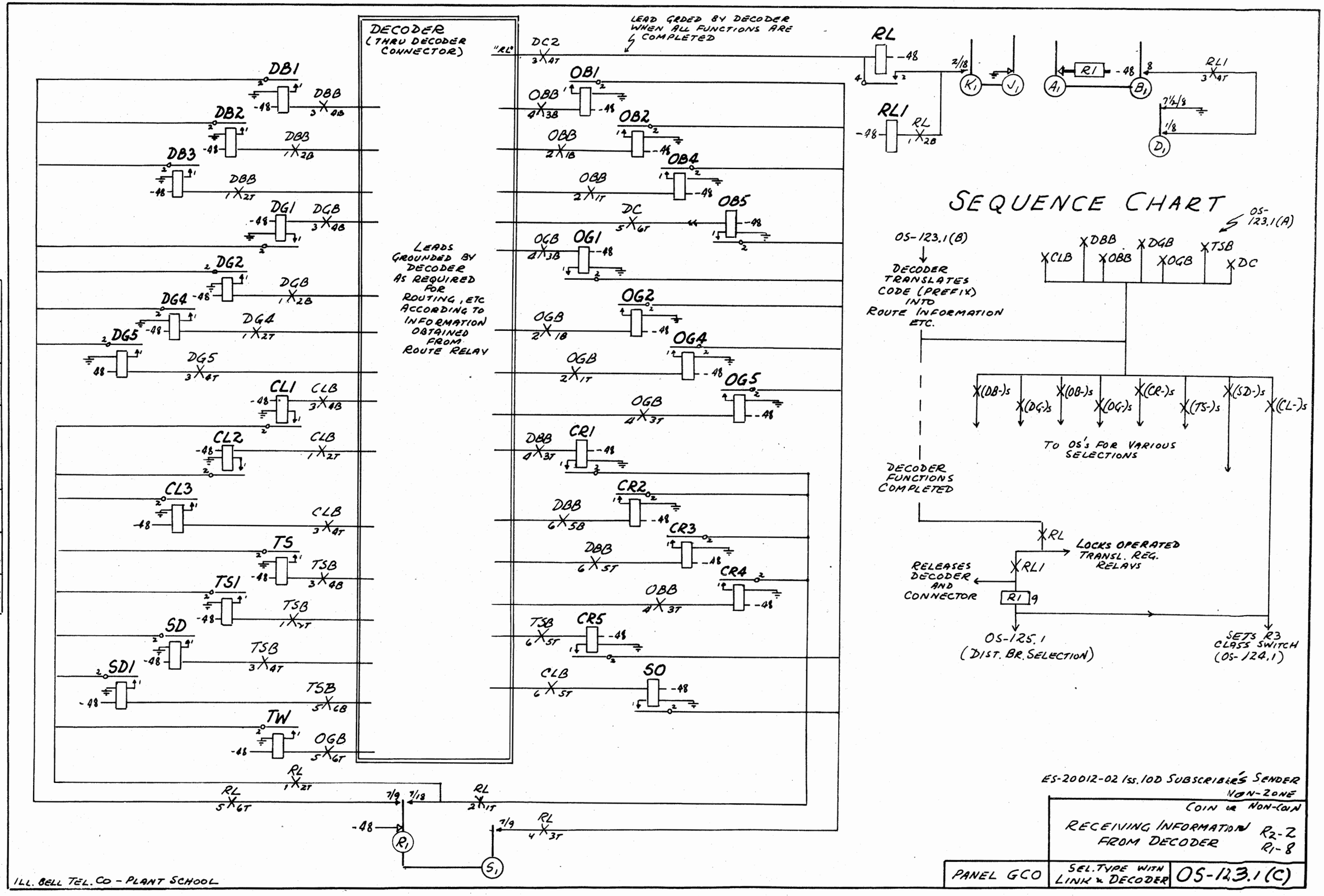
DECODER
(THRU DECODER CONNECTOR)
LEAD GRDED BY DECODER WHEN ALL FUNCTIONS ARE COMPLETED
LEADS GROUNDED BY DECODER AS REQUIRED FOR ROUTING, ETC ACCORDING TO INFORMATION OBTAINED FROM ROUTE RELAY
DB1
DB2
DB3
DG1
DG2
DG4
DG5
CL1
CL2
CL3
TS
TS1
SD
SD1
TW
OB1
OB2
OB4
OB5
OG1
OG2
OG4
OG5
CR1
CR2
CR3
CR4
CR5
SO
RL
RL1
R1
SEQUENCE CHART
OS-123.1(A)
OS-123.1(B)
DECODER TRANSLATES CODE (PREFIX) INTO ROUTE INFORMATION ETC.
TO OS'S FOR VARIOUS SELECTIONS
DECODER FUNCTIONS COMPLETED
LOCKS OPERATED TRANSL. REG. RELAYS
RELEASES DECODER AND CONNECTOR
OS-125.1 (DIST. BR. SELECTION)
SETS R3 CLASS SWITCH (OS-124.1)
ES-20012-02 Iss. 10D SUBSCRIBER'S SENDER NON-ZONE COIN OR NON-COIN
RECEIVING INFORMATION FROM DECODER
R2-2 R1-8
PANEL GCO
SEL. TYPE WITH LINK & DECODER
OS-123.1 (C)
ILL. BELL TEL. CO - PLANT SCHOOL
ISSUE 1
DATE 12-54
BY GHH

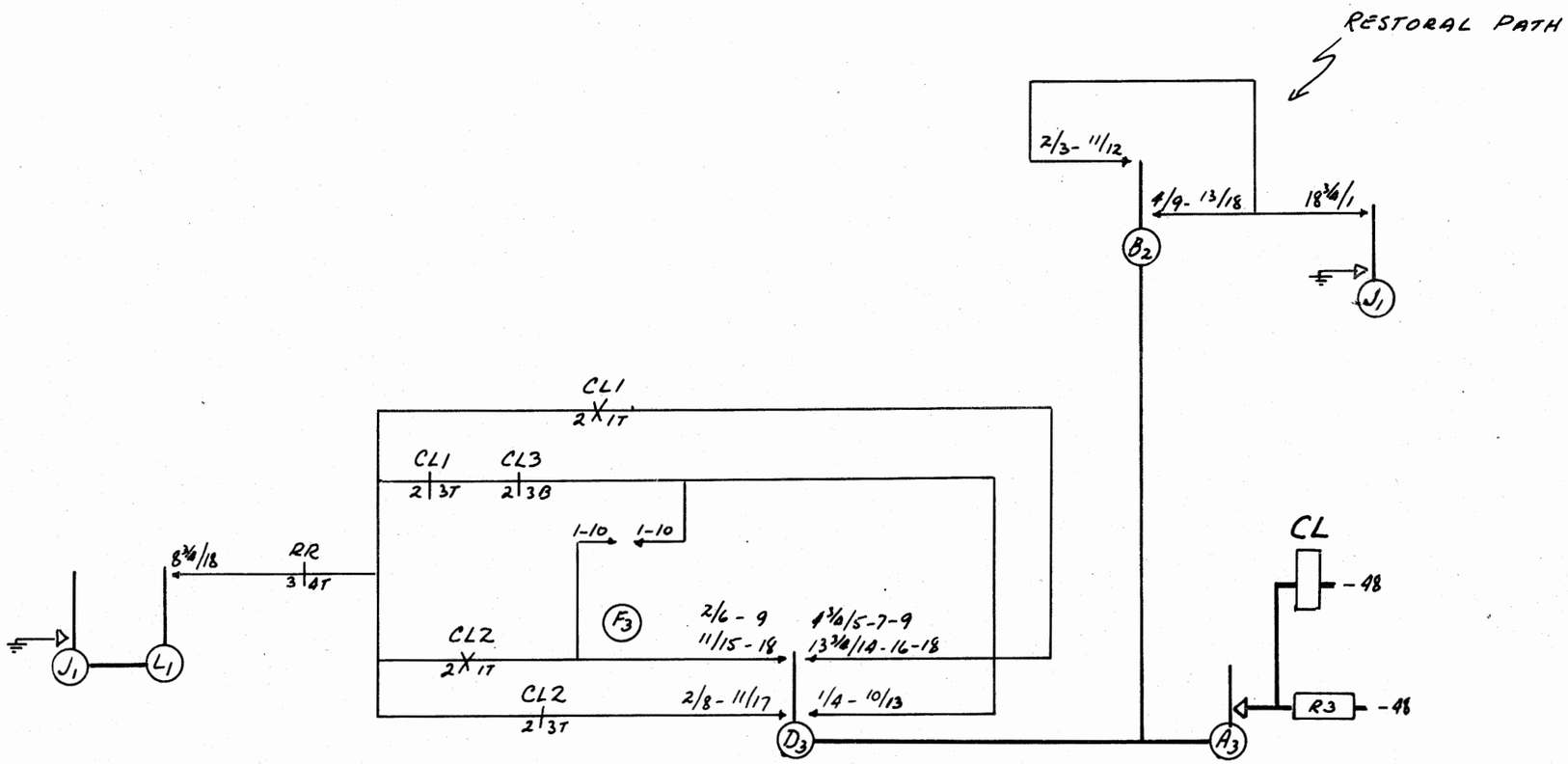

R-3 CLASS SWITCH

SW. POS	CLASS OF CALL	RELAYS
1-10	ZERO OPERATOR 3-DIGIT OPERATOR PERM. SIGNAL	CL3
1-10	OPERATOR (RESTRICTED ZONE)	CL1
7-16	TANDEM PC1	CL2 OR CL2-CL3
8-17	DIRECT PC1	CL1-CL2
9-18	FULL MECHANICAL	NONE

ISSUE	1
DATE	12-54
BY	GHH

ES-20012-02 Iss.10D SUBSCRIBER'S SENDER NON-ZONE

COIN OR NON-COIN

SETTING R-3 CLASS SWITCH

R2-2
R1-9

PANEL GCO

SEL. TYPE WITH LINK & DECODER

OS-124.1

ILL. BELL TEL. CO - PLANT SCHOOL

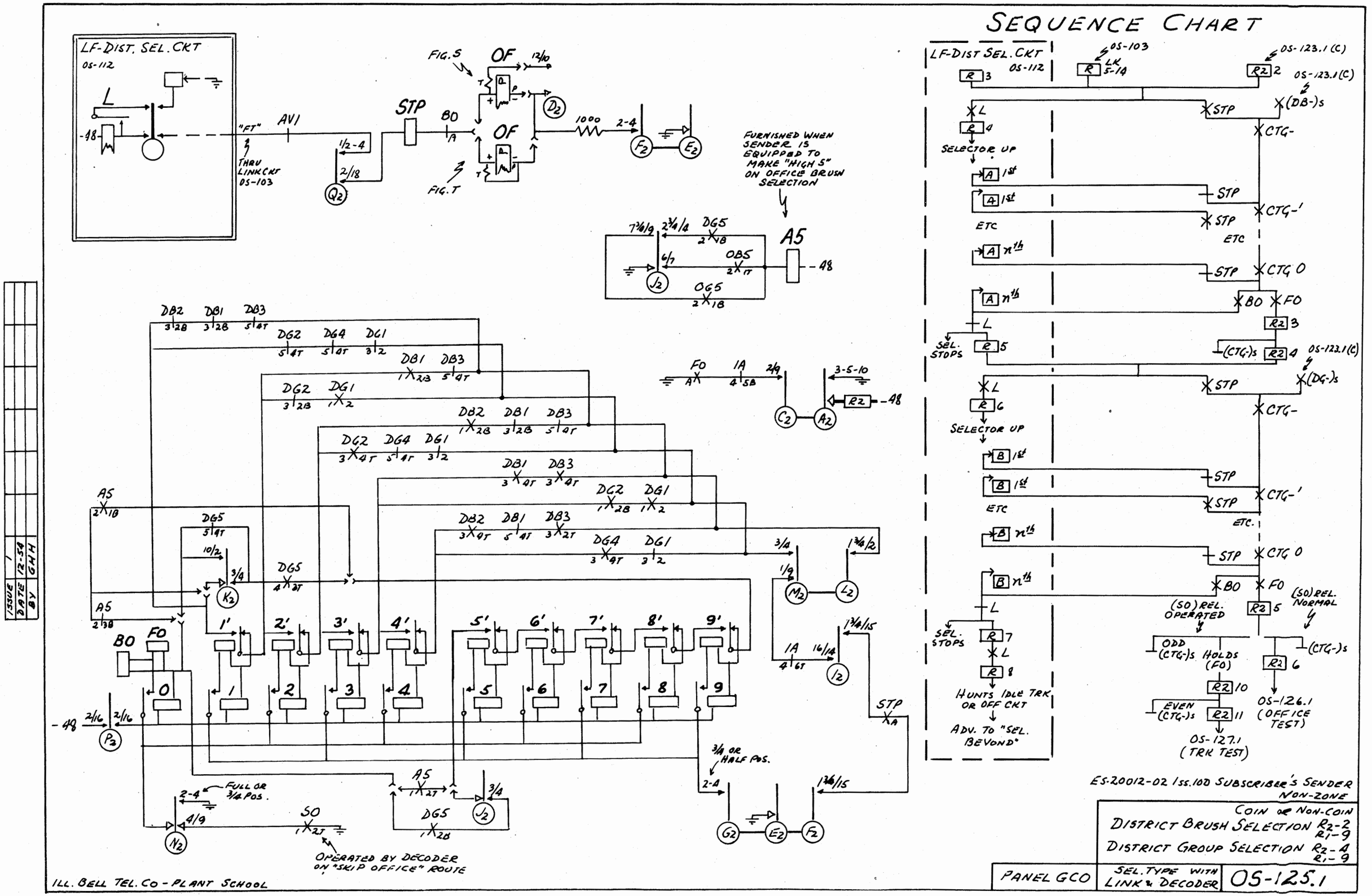
SEQUENCE CHART
LF-DIST. SEL. CKT
OS-112
L
-48
"FT"
THRU LINK CKT OS-103
AV1
1/2-4
2/18
Q2
STP
BO
1A
FIG. S
FIG. T
OF
12/10
D2
1000
2-4
F2
E2
FURNISHED WHEN SENDER IS EQUIPPED TO MAKE "HIGH S" ON OFFICE BRUSH SELECTION
A5
7 3/8/9
2 3/4/4
DG5
2/18
6/7
OB5
2/17
J2
OG5
2/18
-48
DB2 3/2B
DB1 3/2B
DB3 5/4T
DG2 5/4T
DG4 5/4T
DG1 3/2
DB1 1/2B
DB3 5/4T
DG2 3/2B
DG1 1/2
DB2 1/2B
DB1 3/2B
DB3 5/4T
DG2 3/4T
DG4 5/4T
DG1 3/2
DB1 3/4T
DB3 3/4T
DG2 1/2B
DG1 1/2
DB2 3/4T
DB1 5/4T
DB3 3/2T
DG4 3/4T
DG1 3/2
A5 2/18
DG5 5/4T
10/2
3/4
K2
DG5 4/2T
A5 2/3B
BO
FO
1' 2' 3' 4' 5' 6' 7' 8' 9'
0 1 2 3 4 5 6 7 8 9
-48
2/16
2/16
P2
FO A
1A 4/5B
2/9
3-5-10
C2
A2
R2
-48
3/4
1 3/4/2
1/9
M2
L2
1A 4/6T
16/14
12
1 3/4/15
STP A
3/4 OR HALF POS.
2-4
1 3/4/15
G2
E2
F2
2-4
FULL OR 3/4 POS.
4/9
N2
SO 1/2T
A5 1/2T
3/4
DG5 1/2B
J2
OPERATED BY DECODER ON "SKIP OFFICE" ROUTE
LF-DIST SEL. CKT
OS-112
R 3
L
R 4
SELECTOR UP
A 1st
A 1st
ETC
A n th
A n th
L
SEL. STOPS
R 5
L
R 6
SELECTOR UP
B 1st
B 1st
ETC
B n th
B n th
L
SEL. STOPS
R 7
L
R 8
HUNTS IDLE TRK OR OFF CKT
ADV. TO "SEL. BEYOND"
OS-103
R LK 5-14
OS-123.1 (C)
R2 2
OS-123.1 (C)
(DB-)s
STP
CTG-
STP
CTG-'
STP
ETC
STP
CTG 0
BO
FO
R2 3
(CTG-)s
R2 4
OS-123.1 (C)
(DG-)s
STP
CTG-
STP
CTG-'
STP
ETC.
STP
CTG 0
BO
FO
R2 5
(SO) REL. OPERATED
(SO) REL. NORMAL
ODD (CTG-)s
HOLDS (FO)
(CTG-)s
R2 6
R2 10
EVEN (CTG-)s
R2 11
OS-126.1 (OFFICE TEST)
OS-127.1 (TRK TEST)
ES-20012-02 Iss.100 SUBSCRIBER'S SENDER NON-ZONE
COIN OR NON-COIN
DISTRICT BRUSH SELECTION R2-2 R1-9
DISTRICT GROUP SELECTION R2-4 R1-9
PANEL GCO
SEL. TYPE WITH LINK & DECODER
OS-125.1
ILL. BELL TEL. CO - PLANT SCHOOL
ISSUE 1
DATE 12-58
BY GHH

SEQUENCE CHART

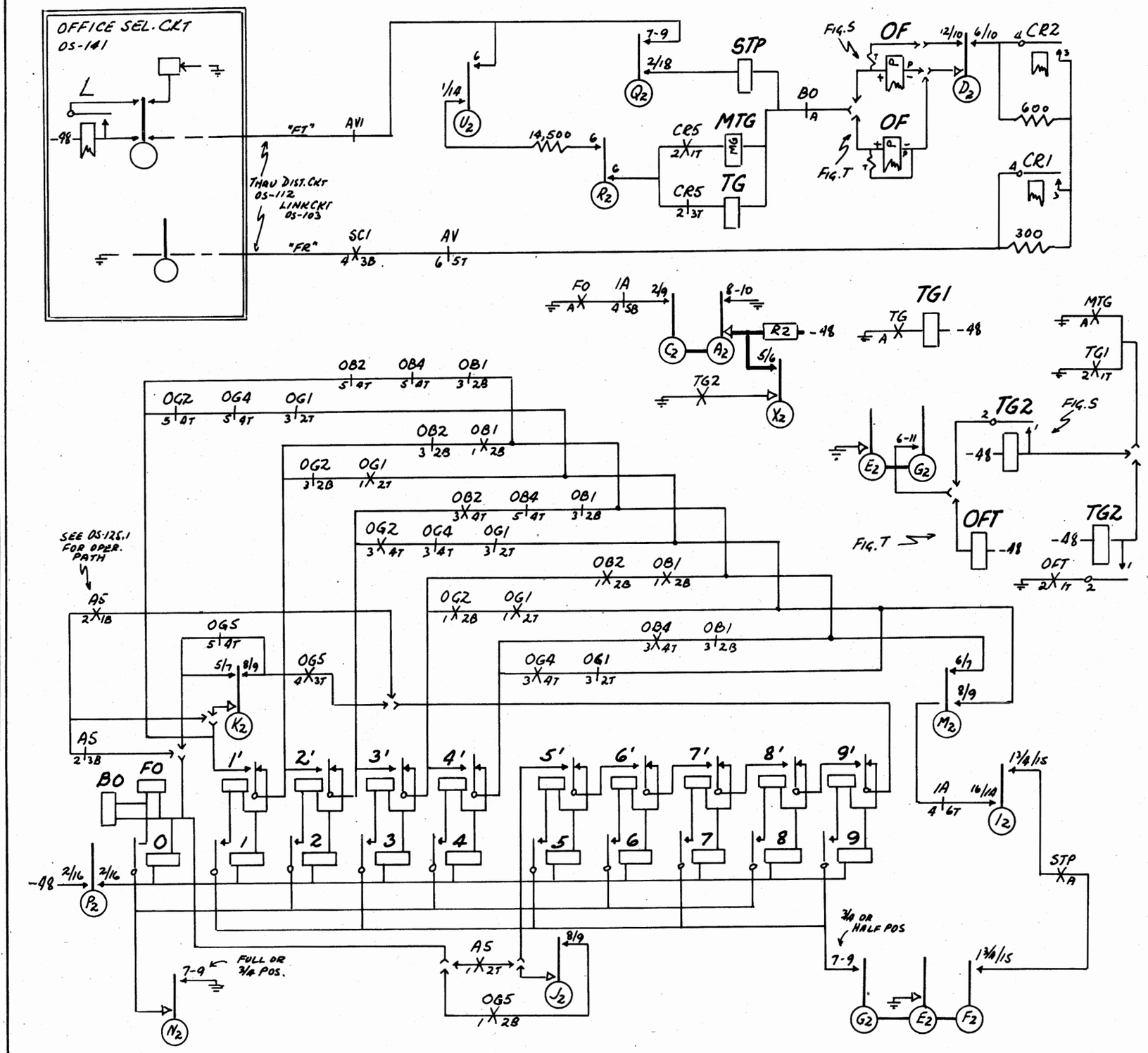

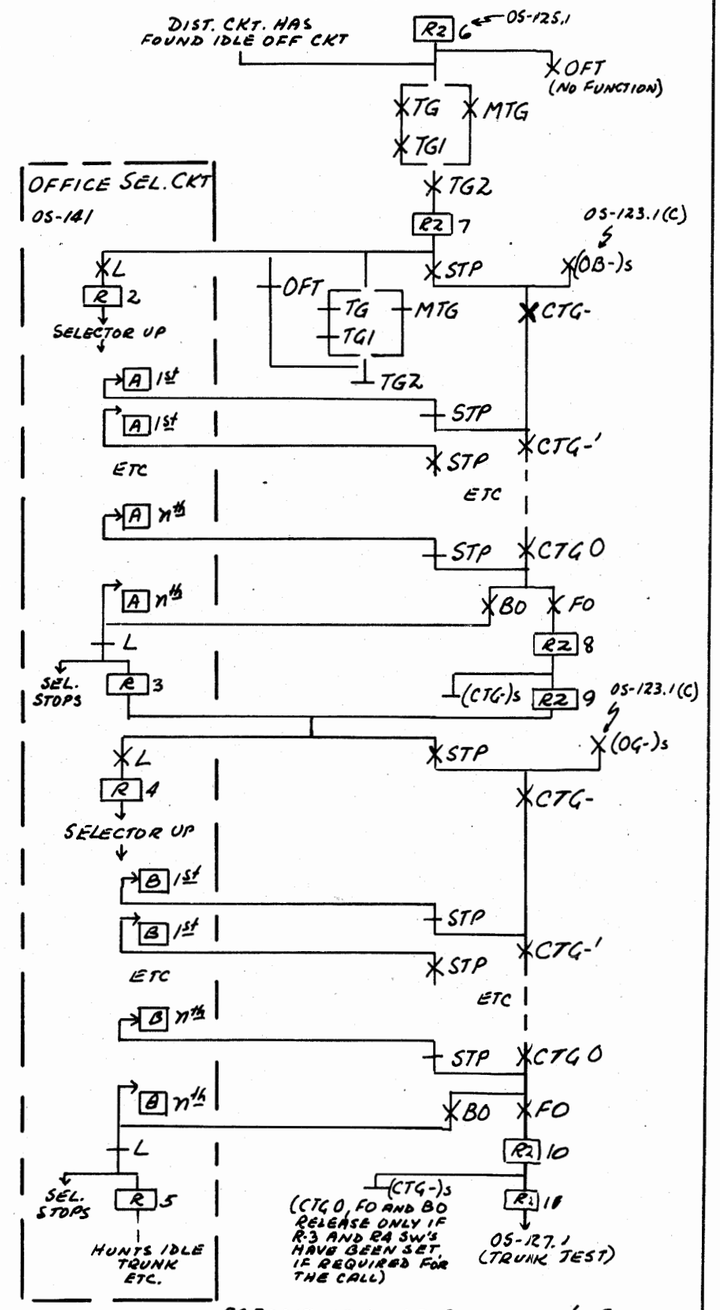

ES-20012-02 Iss. 10D SUBSCRIBER'S SENDER NON-ZONE

OFFICE TEST	COIN OR NON-COIN R_2-6 R_1-9
OFFICE BRUSH & GROUP SELECTIONS	R_2 7/9 R_1-9

PANEL GCO	SEL. TYPE WITH LINK & DECODER	OS-126.1

ISSUE	DATE	BY
1	12-18	GHH

SEQUENCE CHART

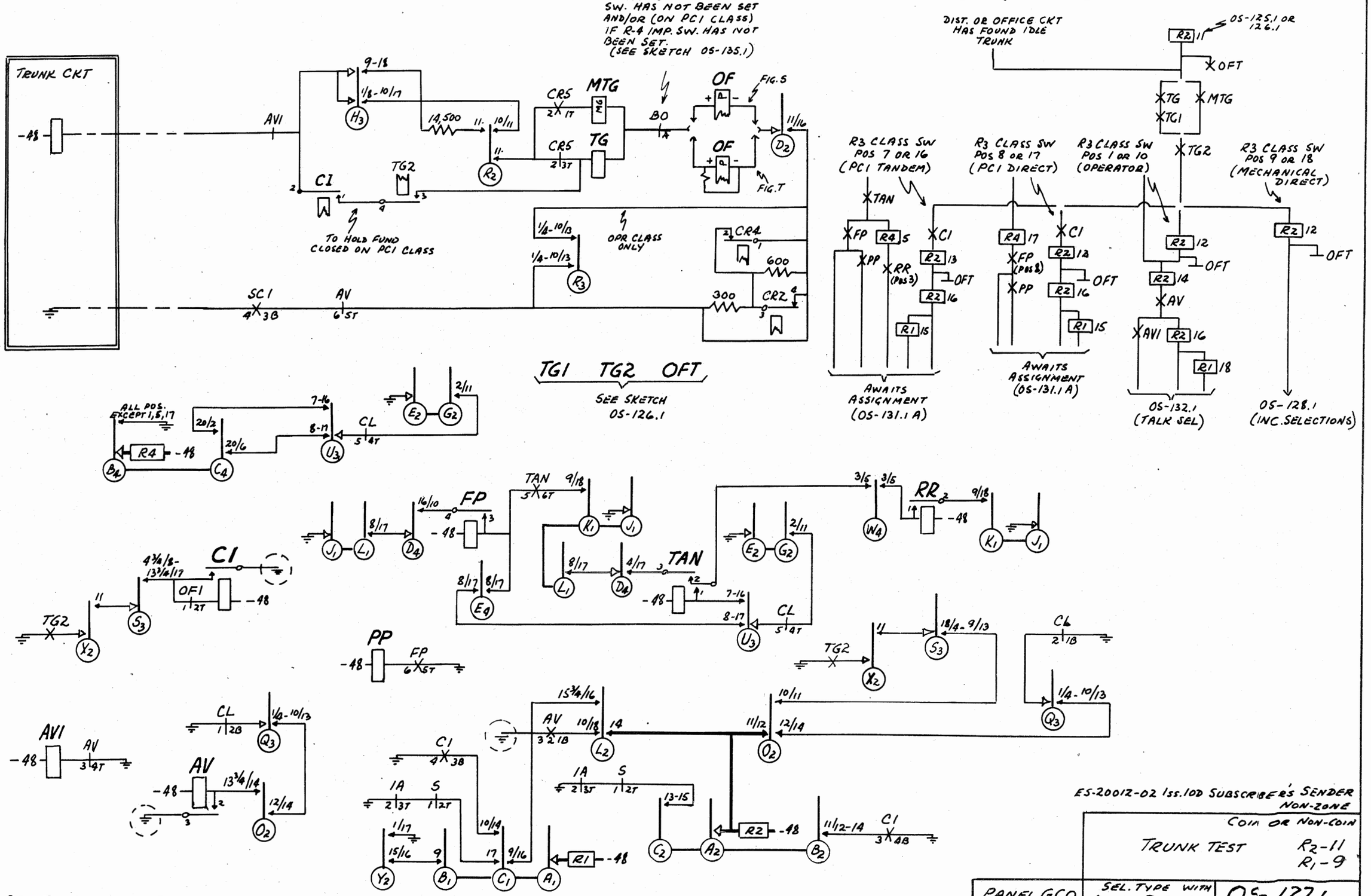

ISSUE	DATE	BY
1	12-59	GHH

ES-20012-02 Iss.10D SUBSCRIBER'S SENDER NON-ZONE

COIN OR NON-COIN

TRUNK TEST

R2-11
R1-9

PANEL GCO

SEL. TYPE WITH LINK & DECODER

OS-127.1

ILL. BELL TEL. CO - PLANT SCHOOL

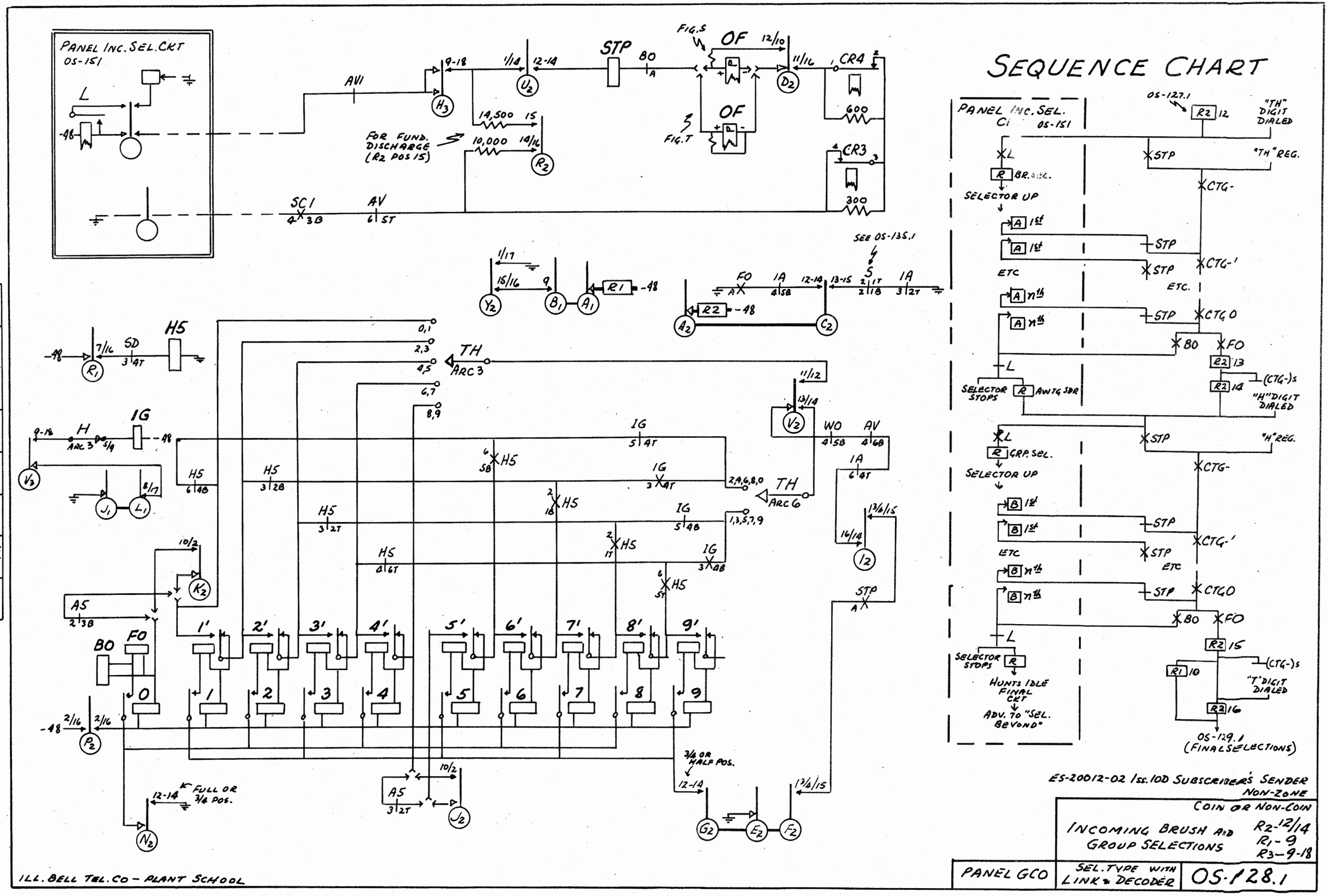

SEQUENCE CHART

ES-20012-02 Iss. 10D SUBSCRIBER'S SENDER NON-ZONE

COIN OR NON-COIN

INCOMING BRUSH AND GROUP SELECTIONS

R2-12/14
R1-9
R3-9-18

PANEL GCO	SEL. TYPE WITH LINK & DECODER	OS-128.1

ISSUE	DATE	BY
1	12-59	GHH

ILL. BELL TEL. CO – PLANT SCHOOL

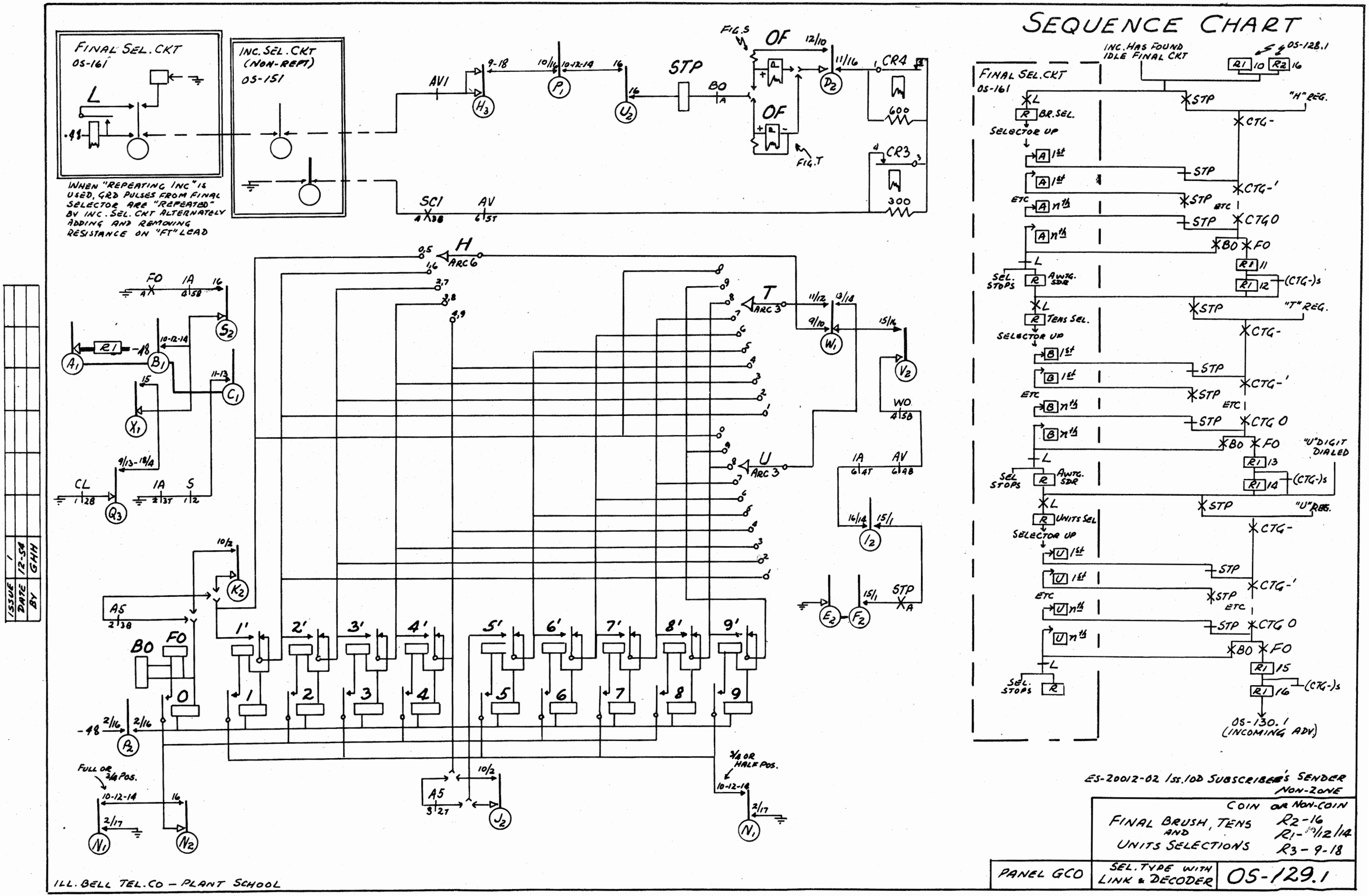
SEQUENCE CHART
FINAL SEL. CKT
OS-161
INC. SEL. CKT
(NON-REPT)
OS-151
WHEN "REPEATING INC" IS USED, GRD PULSES FROM FINAL SELECTOR ARE "REPEATED" BY INC. SEL. CKT ALTERNATELY ADDING AND REMOVING RESISTANCE ON "FT" LEAD
INC. HAS FOUND IDLE FINAL CKT
OS-128.1
"H" REG.
"T" REG.
"U" DIGIT DIALED
"U" REG.
BR. SEL.
SELECTOR UP
TENS SEL.
UNITS SEL.
SEL. STOPS
AWTG. SDR
(CTG-)s
CTG-
CTG-'
CTG 0
ETC
OS-130.1
(INCOMING ADV)
ES-20012-02 1ss.10D SUBSCRIBER'S SENDER NON-ZONE
COIN OR NON-COIN
FINAL BRUSH, TENS AND UNITS SELECTIONS
R2-16
R1-8/12/14
R3-9-18
PANEL GCO
SEL. TYPE WITH LINK & DECODER
OS-129.1
ILL. BELL TEL. CO – PLANT SCHOOL
ISSUE 1
DATE 12-54
BY GHH

SEQUENCE CHART

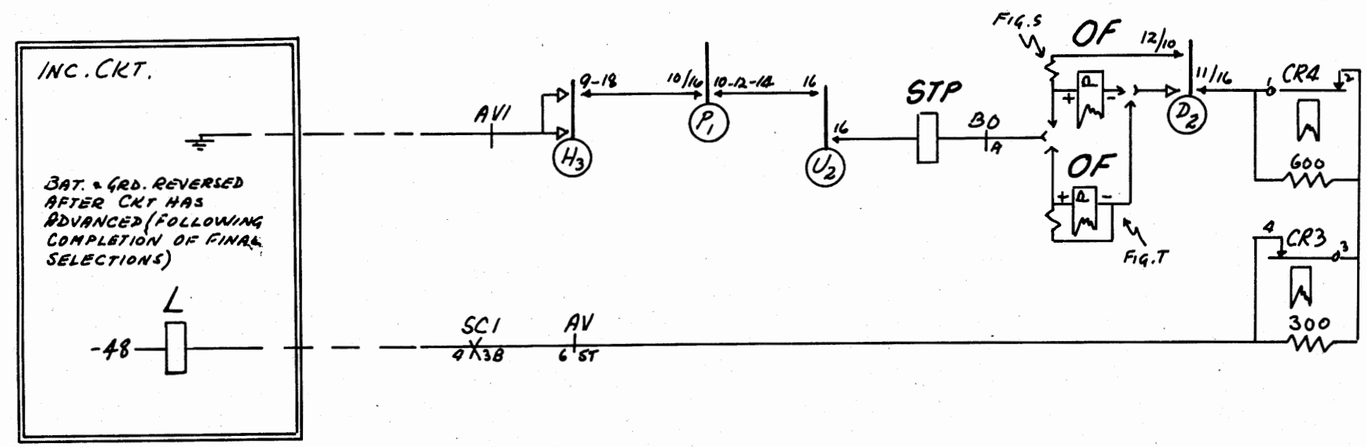

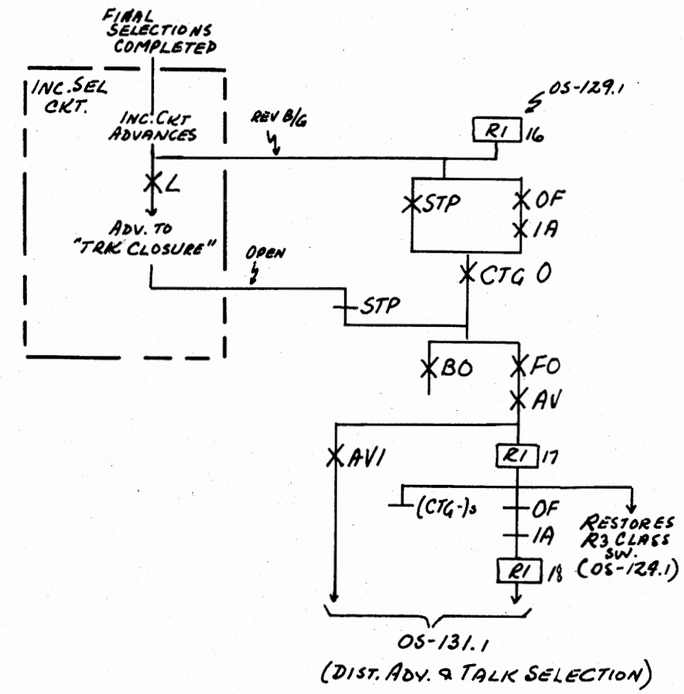

(OF) RELAY LOCKING PATH

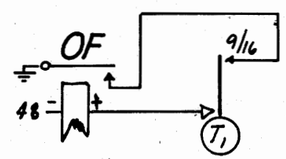

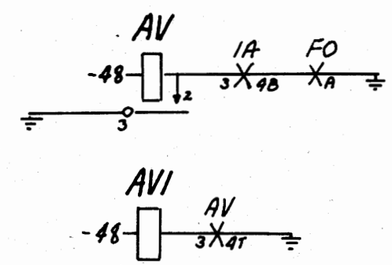

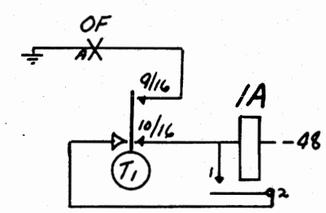

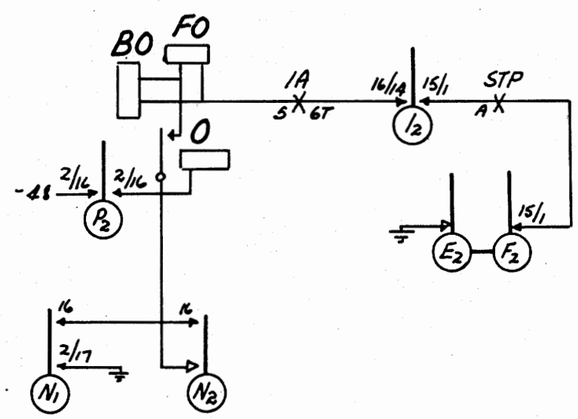

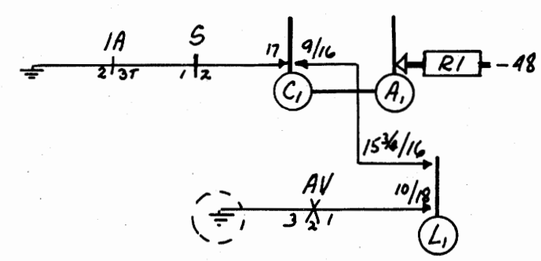

ISSUE	1	
DATE	12-54	
BY	GHH	

ES-20012-02 Iss. 10D SUBSCRIBER'S SENDER NON-ZONE

COIN OR NON-COIN

INCOMING ADVANCE

R2-16
R1-16
R3-9-18

PANEL GCO	SEL. TYPE WITH LINK & DECODER	OS-130.1

ILL. BELL TEL. CO - PLANT SCHOOL

SEQUENCE CHART

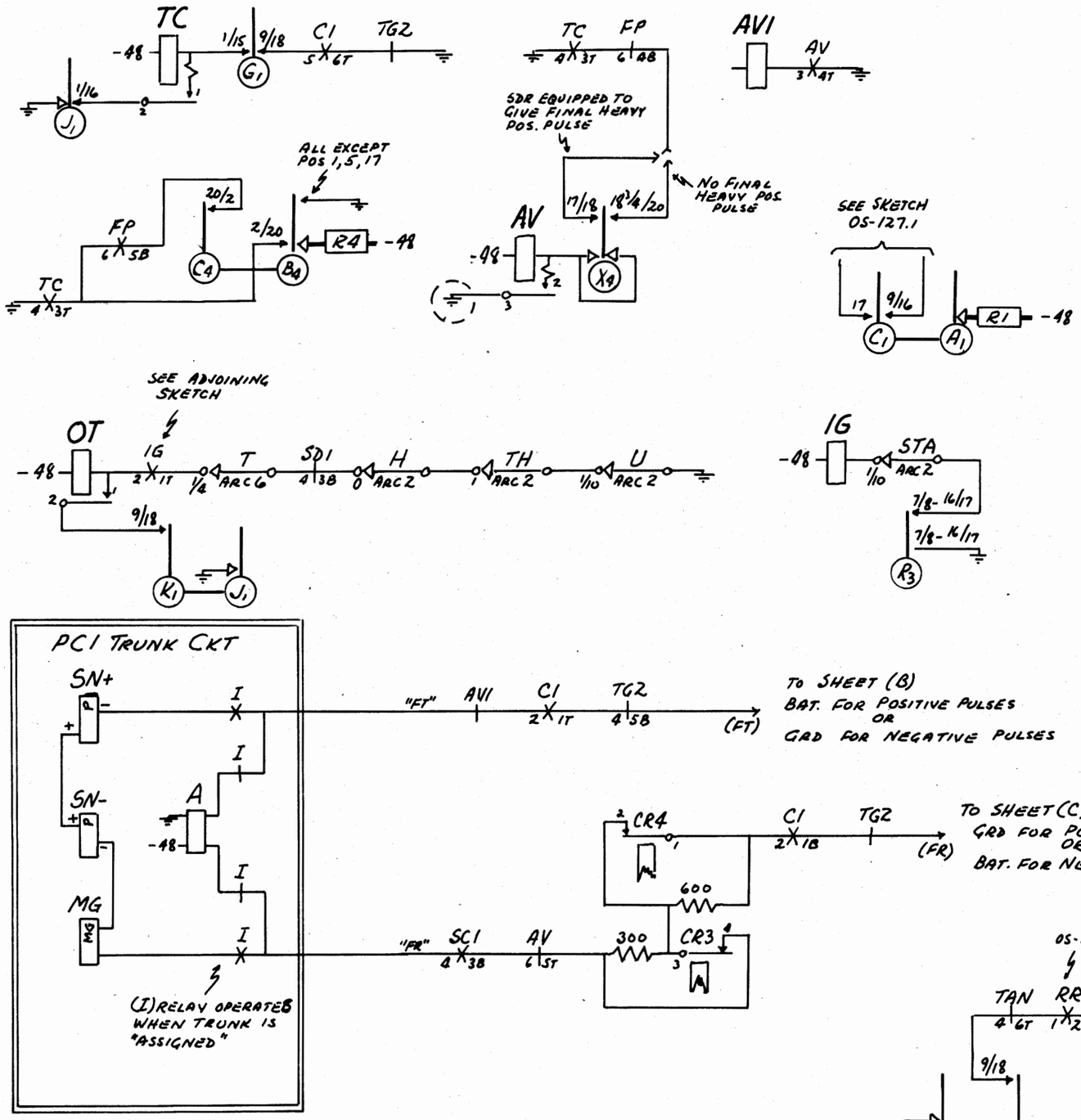

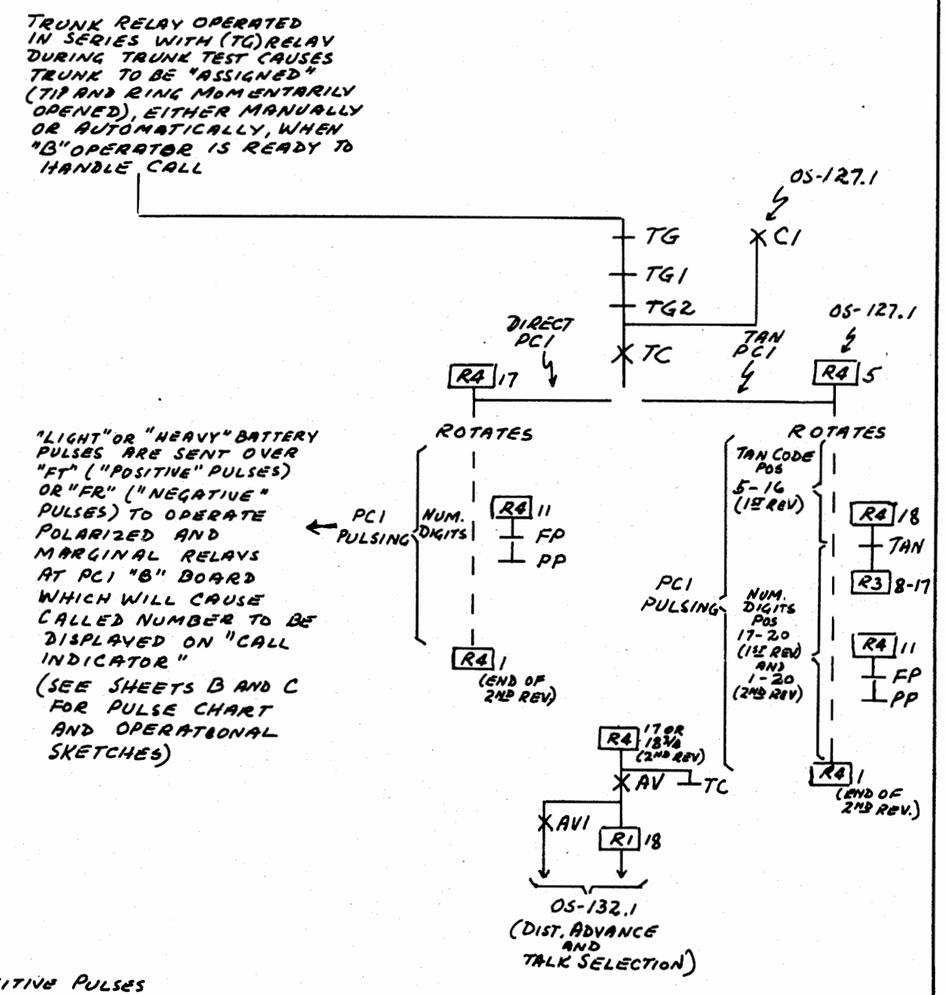

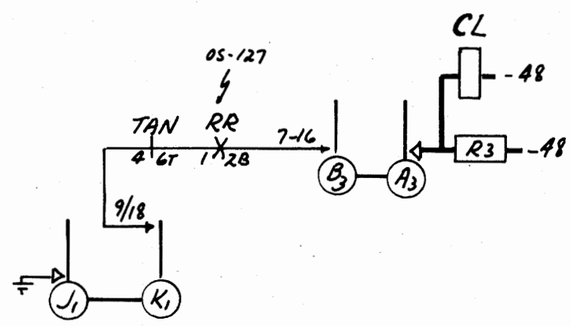

R-3 CLASS SWITCH

7-16 TANDEM PC1
8-17 DIRECT PC1

ES-20012-02 Iss.10D SUBSCRIBER'S SENDER NON-ZONE

COIN OR NON-COIN

PC1 PULSING
FUNDAMENTAL CIRCUIT

R2-16
R1-15

ISSUE	DATE	BY
1	12-54	GHH

PANEL GCO | SEL. TYPE WITH LINK & DECODER | OS-131.1 (A)

ILL. BELL TEL. CO – PLANT SCHOOL

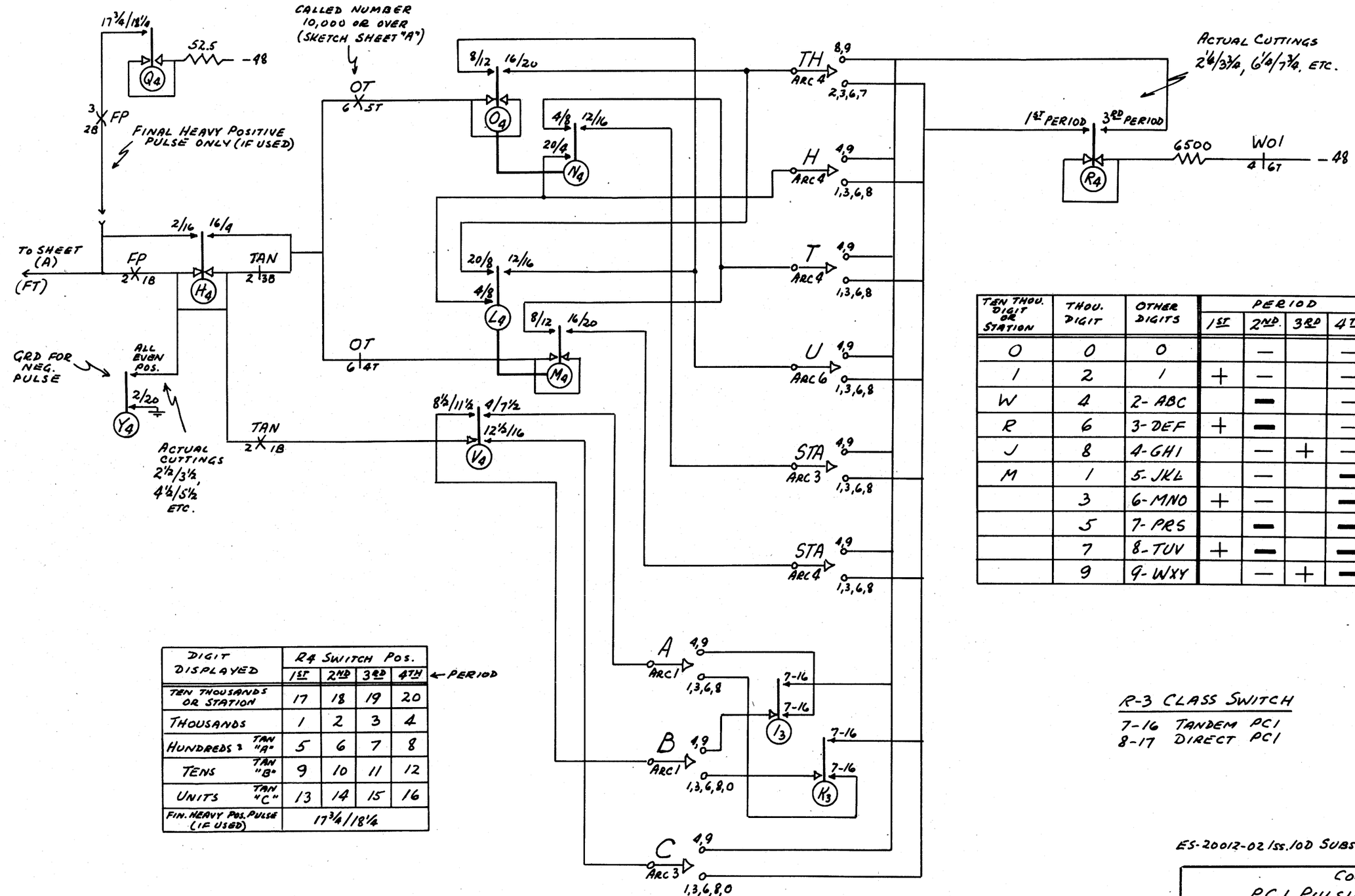

TEN THOU. DIGIT OR STATION	THOU. DIGIT	OTHER DIGITS	PERIOD 1ST	2ND	3RD	4TH
0	0	0		—		—
1	2	1	+	—		—
W	4	2- ABC		▬		—
R	6	3- DEF	+	▬		—
J	8	4- GHI		—	+	—
M	1	5- JKL		—		▬
	3	6- MNO	+	—		▬
	5	7- PRS		▬		▬
	7	8- TUV	+	▬		▬
	9	9- WXY		—	+	▬

DIGIT DISPLAYED	R4 SWITCH POS. 1ST	2ND	3RD	4TH ← PERIOD
TEN THOUSANDS OR STATION	17	18	19	20
THOUSANDS	1	2	3	4
HUNDREDS & TAN "A"	5	6	7	8
TENS TAN "B"	9	10	11	12
UNITS TAN "C"	13	14	15	16
FIN. HEAVY POS. PULSE (IF USED)	17¾/18¼			

R-3 CLASS SWITCH

7-16 TANDEM PC1
8-17 DIRECT PC1

ISSUE	DATE	BY
1	12-58	GHH

ES-20012-02 Iss.10D SUBSCRIBER'S SENDER NON-ZONE

COIN OR NON-COIN

PC1 PULSING R2-16
POSITIVE PULSES R1-15

PANEL GCO | SEL. TYPE WITH LINK & DECODER | OS-131.1(B)

ILL. BELL TEL. CO - PLANT SCHOOL

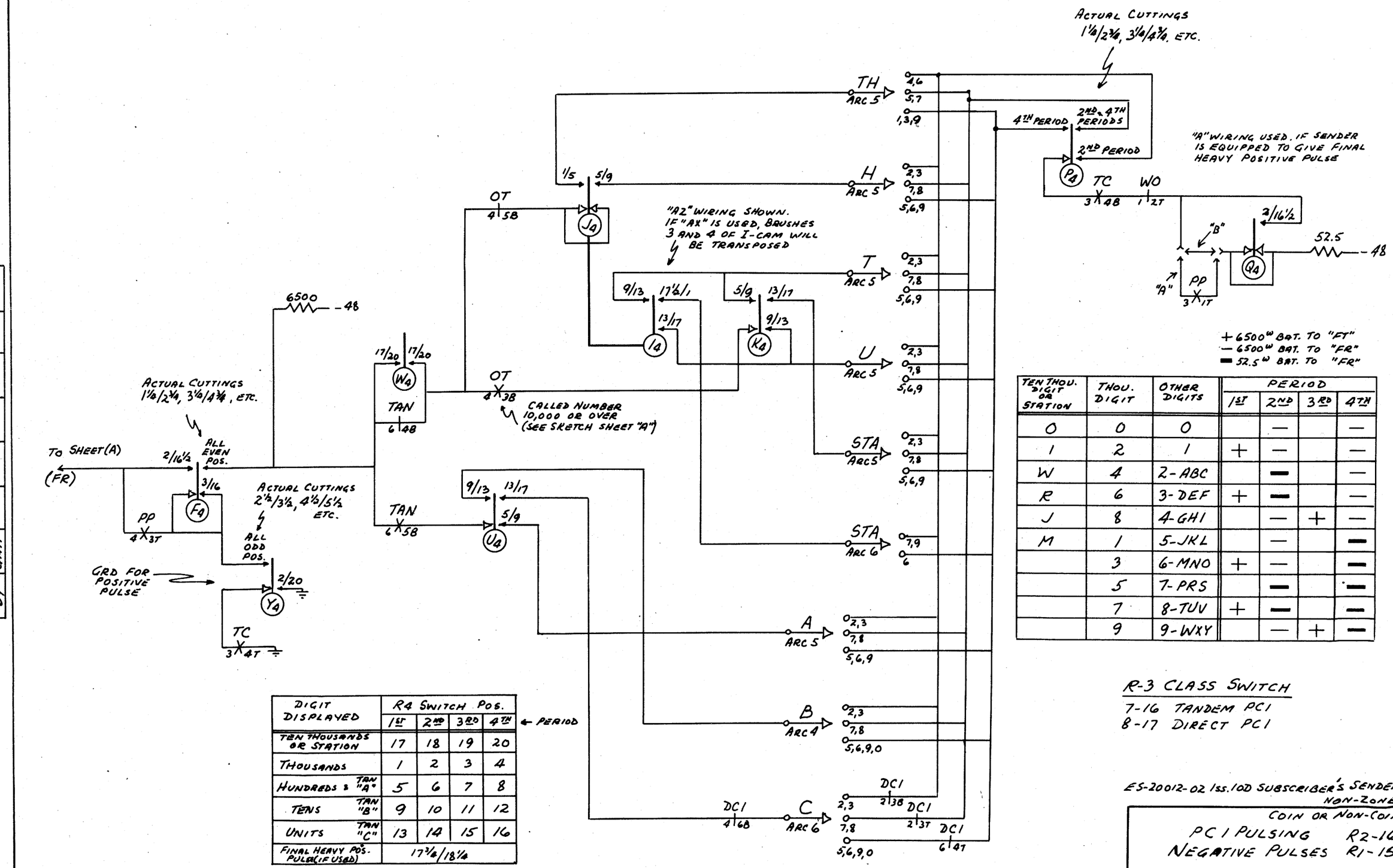

TEN THOU. DIGIT OR STATION	THOU. DIGIT	OTHER DIGITS	PERIOD 1ST	2ND	3RD	4TH
0	0	0		—		—
1	2	1	+	—		—
W	4	2-ABC		▬		—
R	6	3-DEF	+	▬		—
J	8	4-GHI		—	+	—
M	1	5-JKL		—		▬
	3	6-MNO	+	—		▬
	5	7-PRS		▬		▬
	7	8-TUV	+	▬		▬
	9	9-WXY		—	+	▬

DIGIT DISPLAYED	R4 SWITCH POS. 1ST	2ND	3RD	4TH ← PERIOD
TEN THOUSANDS OR STATION	17	18	19	20
THOUSANDS	1	2	3	4
HUNDREDS & TAN "A"	5	6	7	8
TENS TAN "B"	9	10	11	12
UNITS TAN "C"	13	14	15	16
FINAL HEAVY POS. PULSE (IF USED)	17 3/4/18 3/4			

R-3 CLASS SWITCH

7-16 TANDEM PC1
8-17 DIRECT PC1

ES-20012-02 Iss. 10D SUBSCRIBER'S SENDER NON-ZONE

COIN OR NON-COIN

PC 1 PULSING R2-16
NEGATIVE PULSES R1-15

ISSUE	DATE	BY
1	12-54	GHH

PANEL GCO | SEL. TYPE WITH LINK & DECODER | OS-131.1(C)

ILL. BELL TEL. CO - PLANT SCHOOL

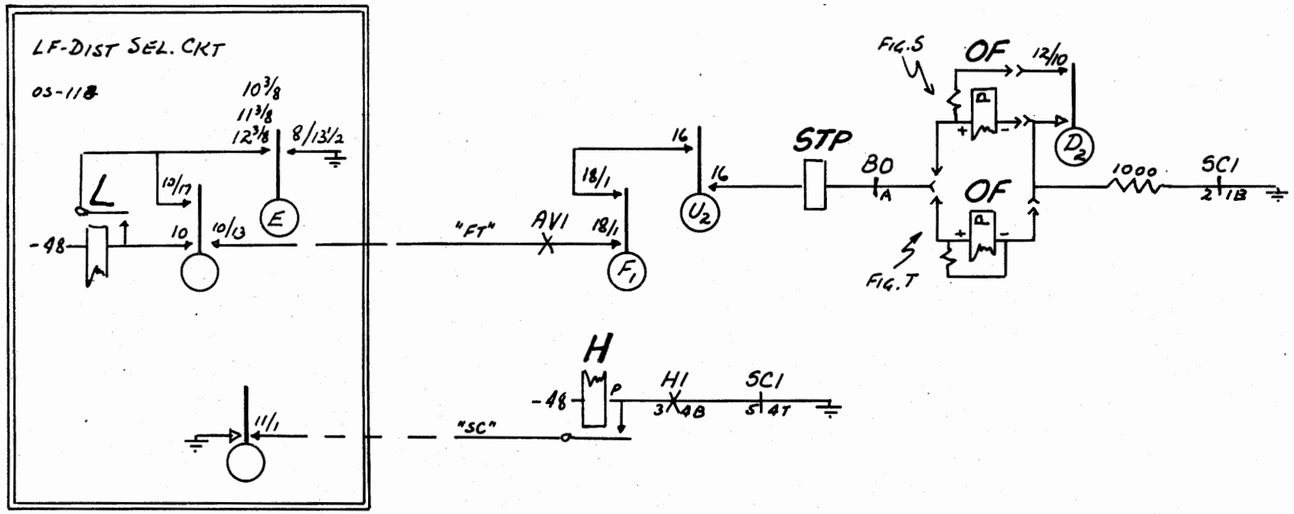

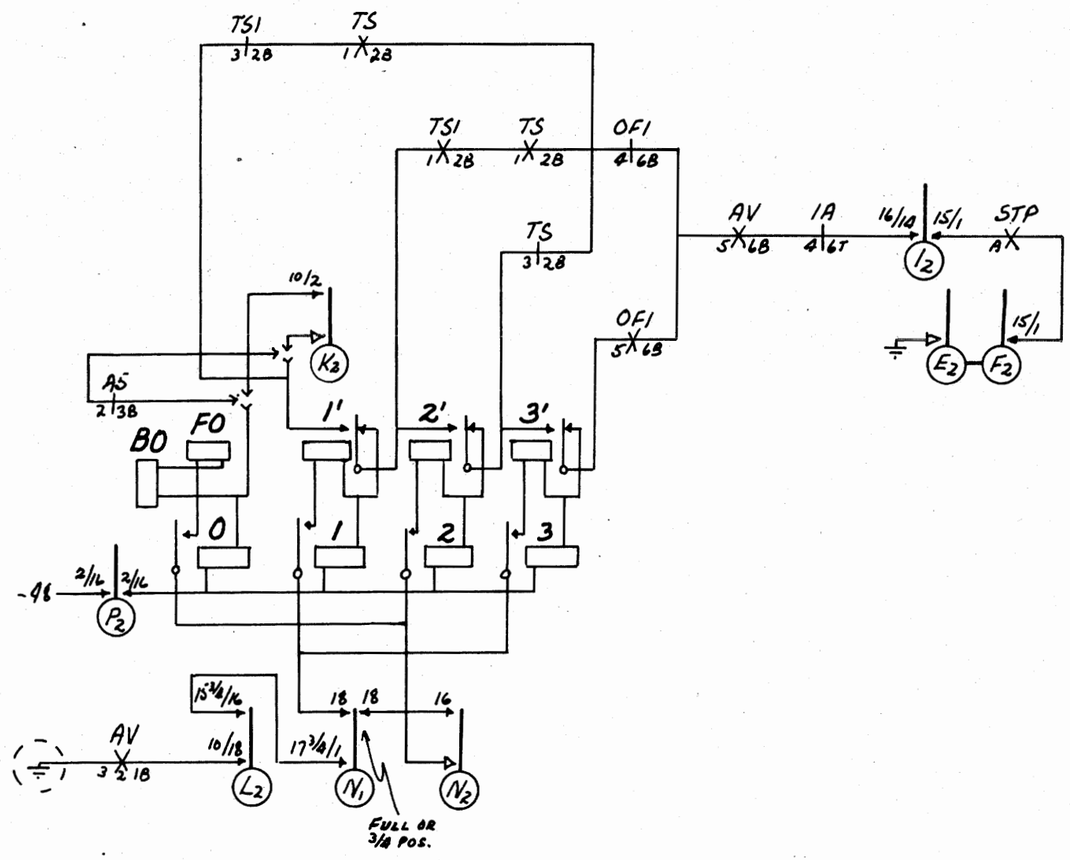

SEQUENCE CHART

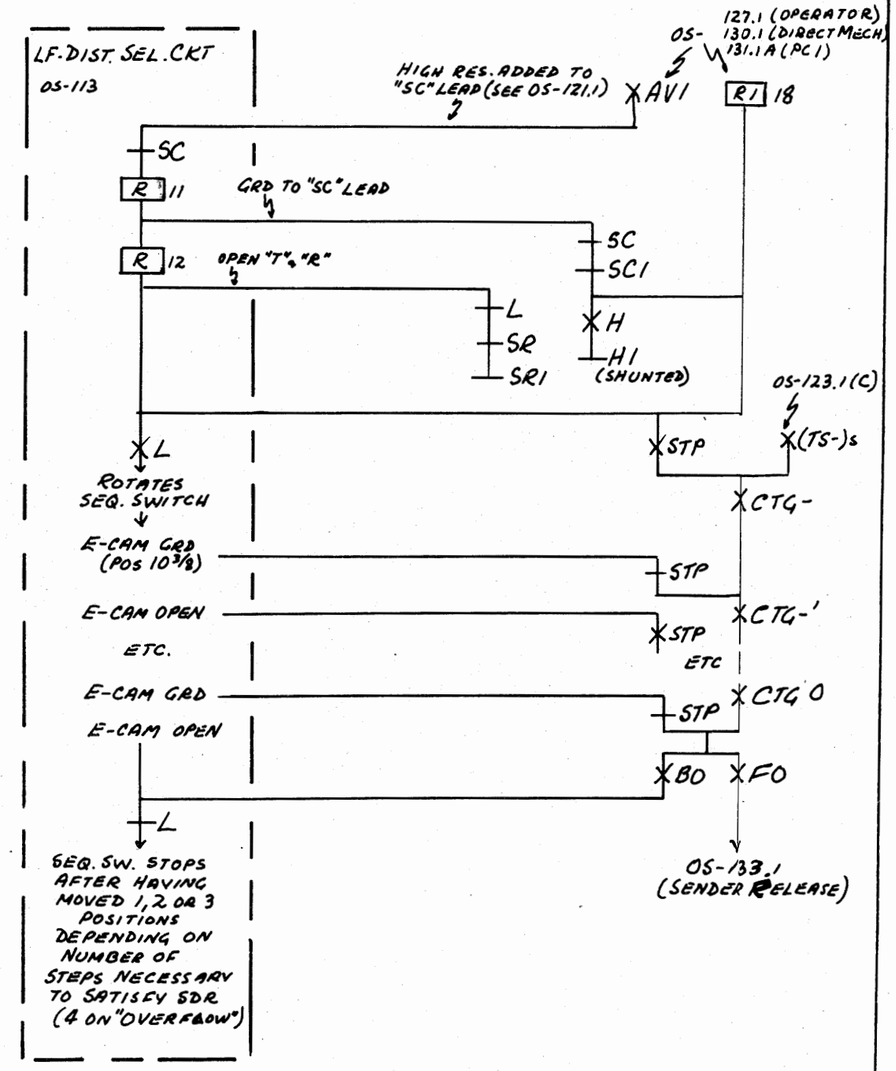

ISSUE	DATE	BY
1	12-54	GHH

ES-20012-02 Iss. 10D SUBSCRIBER'S SENDER NON-ZONE COIN OR NON-COIN

TALK SELECTION R_2-16 R_1-18

PANEL GCO	SEL. TYPE WITH LINK & DECODER	OS-132.1

ILL. BELL TEL. CO - PLANT SCHOOL

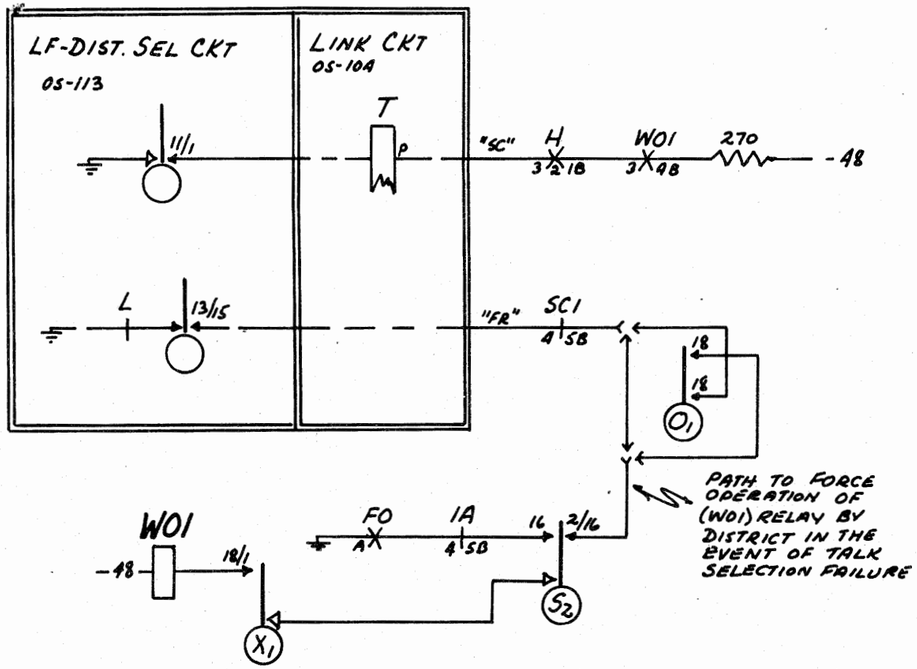

SEQUENCE CHART

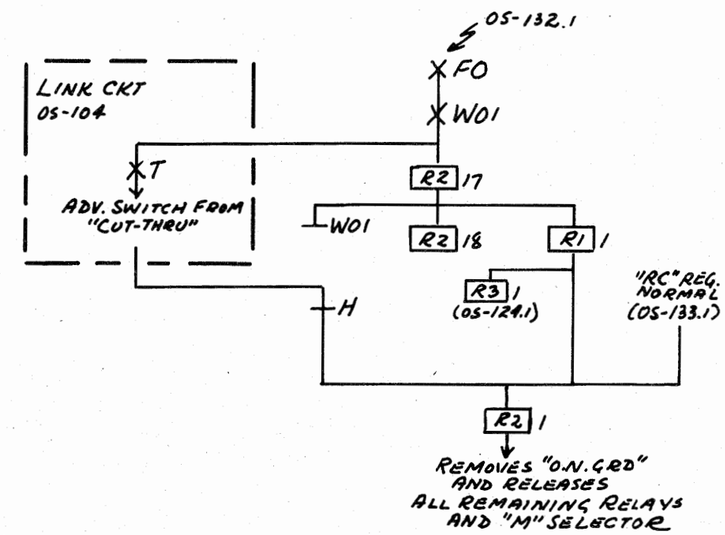

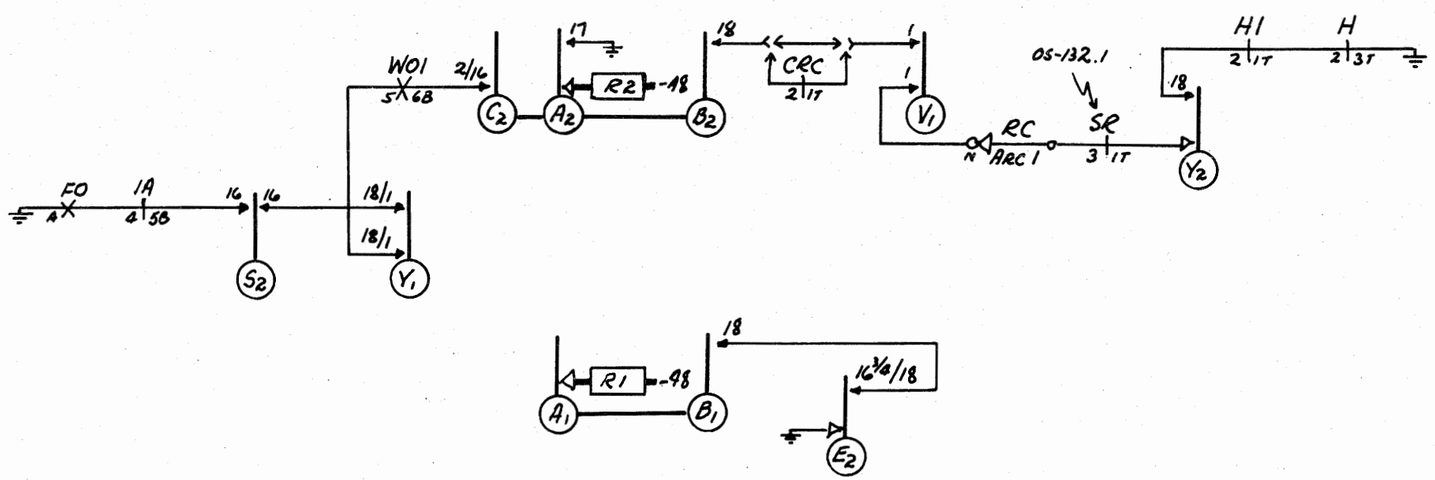

ISSUE	DATE	BY
1	12-59	GHH

ES-20012-02 Iss. 1DD SUBSCRIBER'S SENDER NON-ZONE

COIN OR NON-COIN

SENDER RELEASE

PANEL GCO	SEL. TYPE WITH LINK & DECODER	OS-133.1

ILL. BELL TEL. CO – PLANT SCHOOL

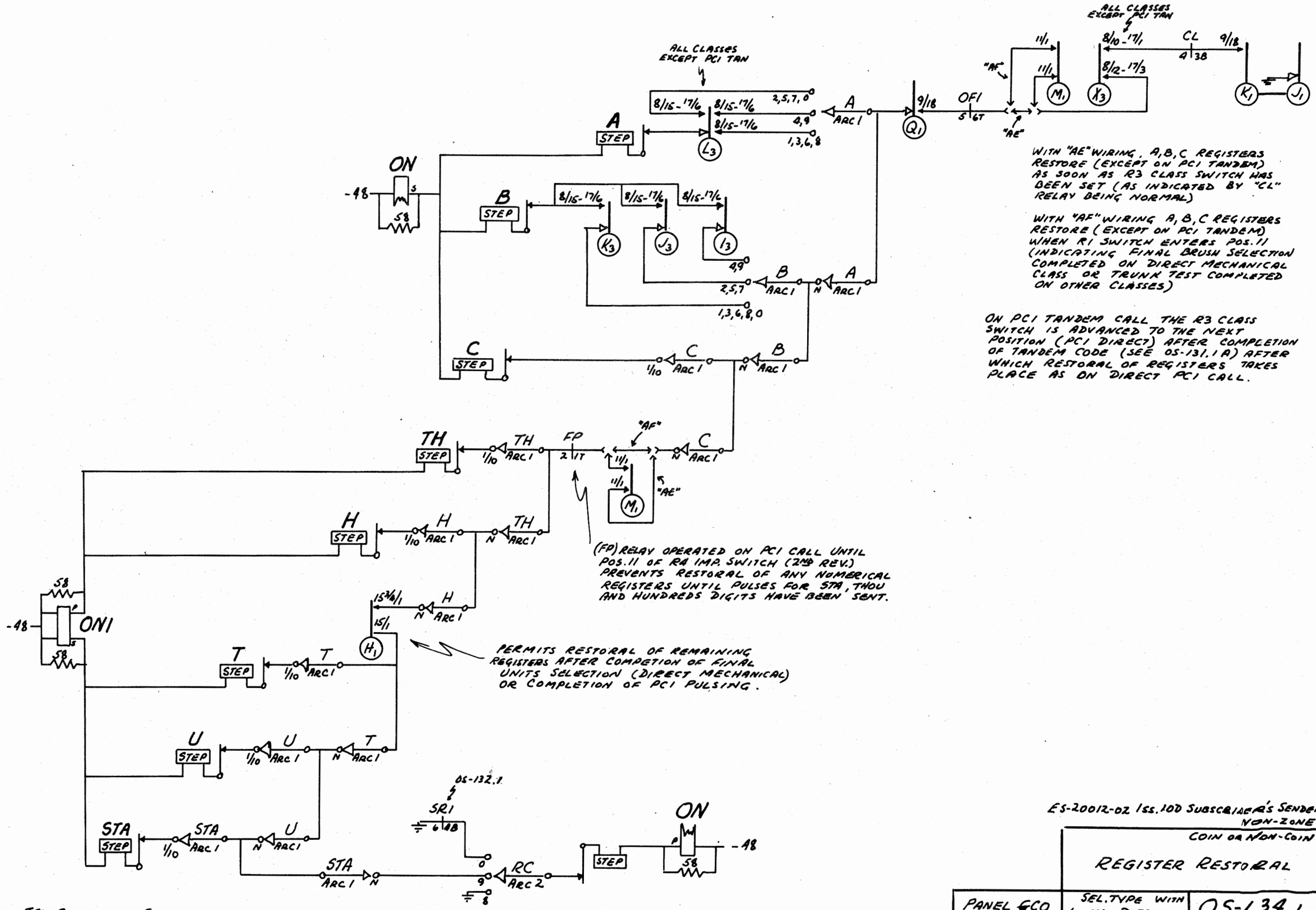

WITH "AE" WIRING, A, B, C REGISTERS RESTORE (EXCEPT ON PC1 TANDEM) AS SOON AS R3 CLASS SWITCH HAS BEEN SET (AS INDICATED BY "CL" RELAY BEING NORMAL)

WITH "AF" WIRING A, B, C REGISTERS RESTORE (EXCEPT ON PC1 TANDEM) WHEN R1 SWITCH ENTERS POS. 11 (INDICATING FINAL BRUSH SELECTION COMPLETED ON DIRECT MECHANICAL CLASS OR TRUNK TEST COMPLETED ON OTHER CLASSES)

ON PC1 TANDEM CALL THE R3 CLASS SWITCH IS ADVANCED TO THE NEXT POSITION (PC1 DIRECT) AFTER COMPLETION OF TANDEM CODE (SEE OS-131.1A) AFTER WHICH RESTORAL OF REGISTERS TAKES PLACE AS ON DIRECT PC1 CALL.

(FP) RELAY OPERATED ON PC1 CALL UNTIL POS. 11 OF R4 IMP. SWITCH (2ND REV.) PREVENTS RESTORAL OF ANY NUMERICAL REGISTERS UNTIL PULSES FOR STA, THOU AND HUNDREDS DIGITS HAVE BEEN SENT.

PERMITS RESTORAL OF REMAINING REGISTERS AFTER COMPETION OF FINAL UNITS SELECTION (DIRECT MECHANICAL) OR COMPLETION OF PC1 PULSING.

ISSUE	DATE	BY
1	12-54	GHH

ES-20012-02 Iss. 10D SUBSCRIBER'S SENDER NON-ZONE

COIN OR NON-COIN

REGISTER RESTORAL

PANEL 6CO	SEL. TYPE WITH LINK & DECODER	OS-134.1

ILL. BELL TEL. CO - PLANT SCHOOL

SEQUENCE CHART

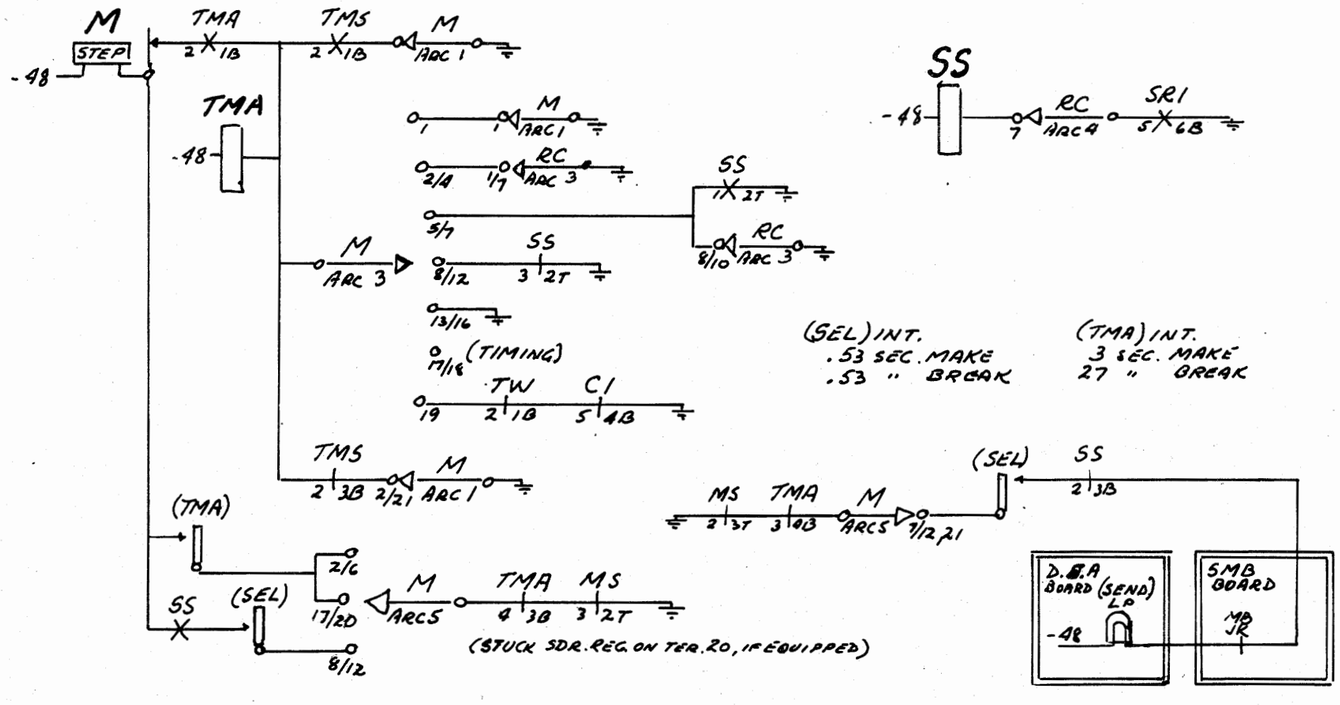

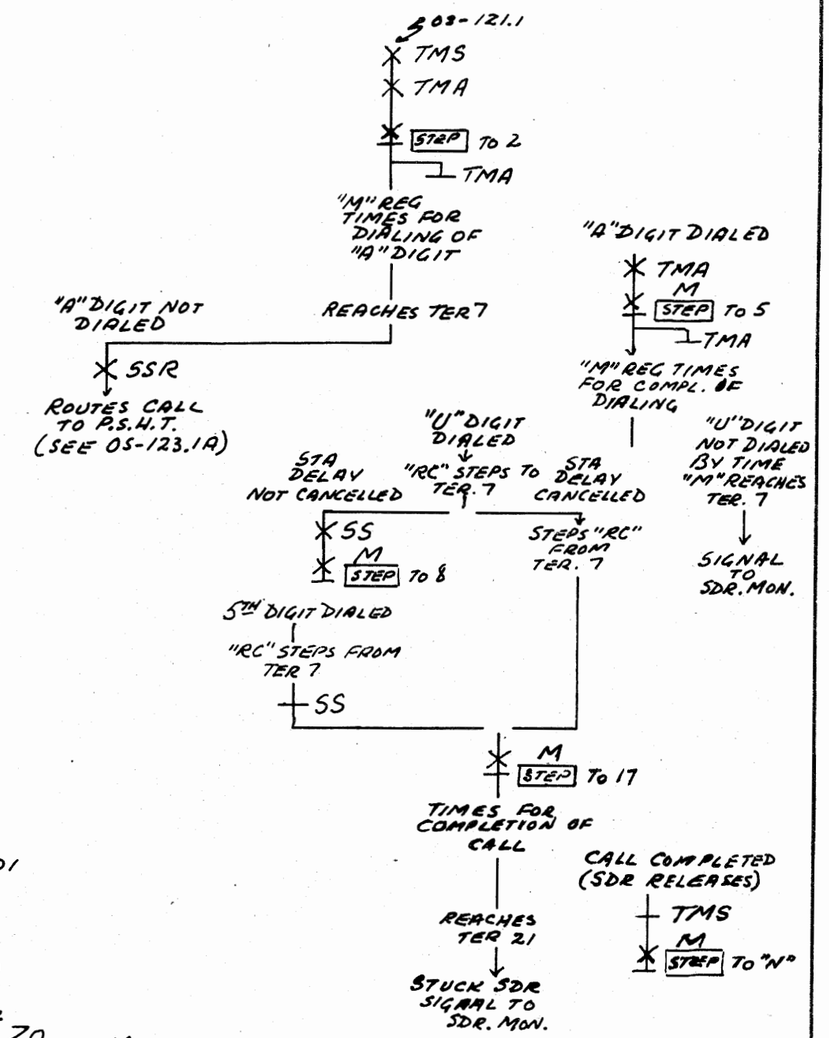

CANCELLING STA DELAY BY MOVING "RC" REG. FROM TER. 7

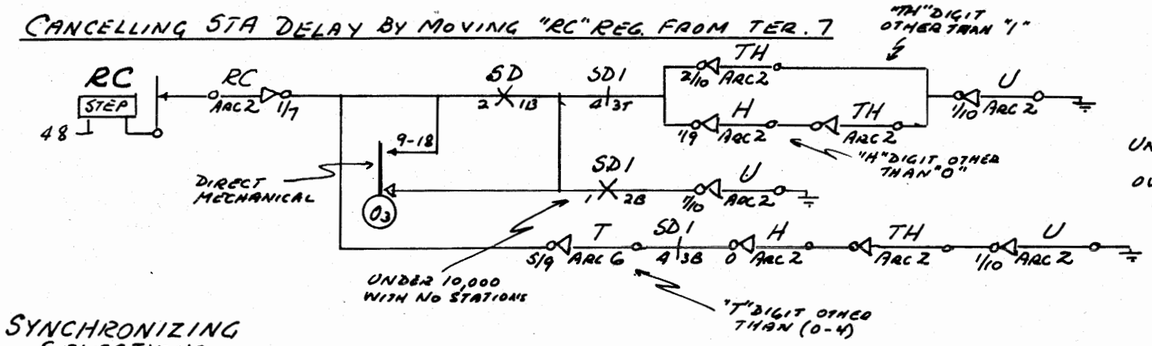

RELAY OPERATION GOVERNING STATION DELAY

UNDER 10,000	WITH STA	SD1
" "	NO STA	SD-SD1
OVER "	WITH STA	NONE
" "	NO STA	SD

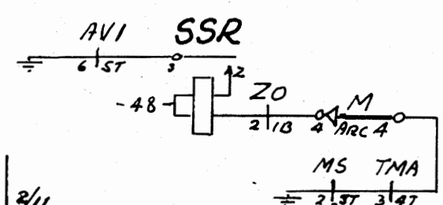

SYNCHRONIZING SELECTIONS

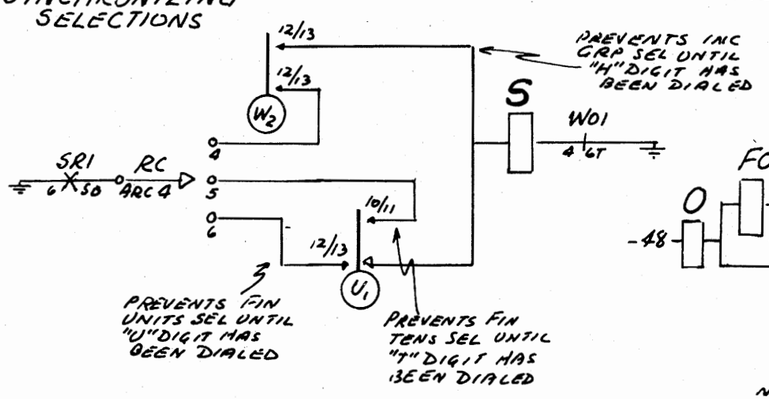

SYNCHRONIZING TRUNK TEST

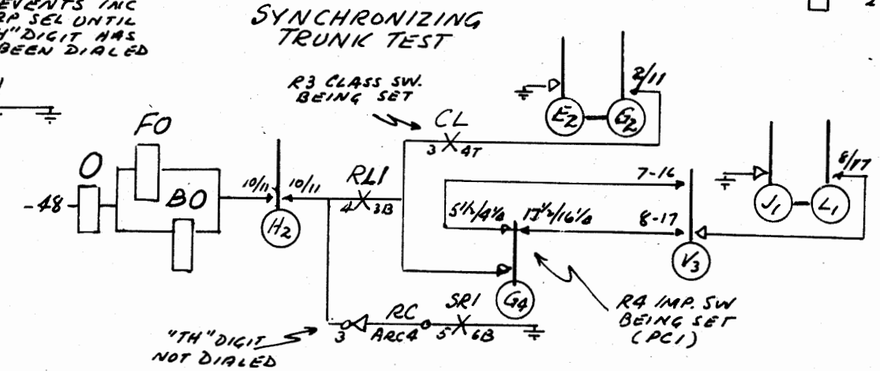

ISSUE 1
DATE 12-54
BY CHH

ES-20012-02 ISS. 10D SUBSCRIBER'S SENDER
NON-ZONE
NON-COIN

"M" REGISTER FUNCTION
SYNCHRONIZATION

PANEL CCO	SEL. TYPE WITH LINK & DECODER	OS-135.1

ILL. BELL TEL. CO – PLANT SCHOOL

OFFICE SEL. CKT

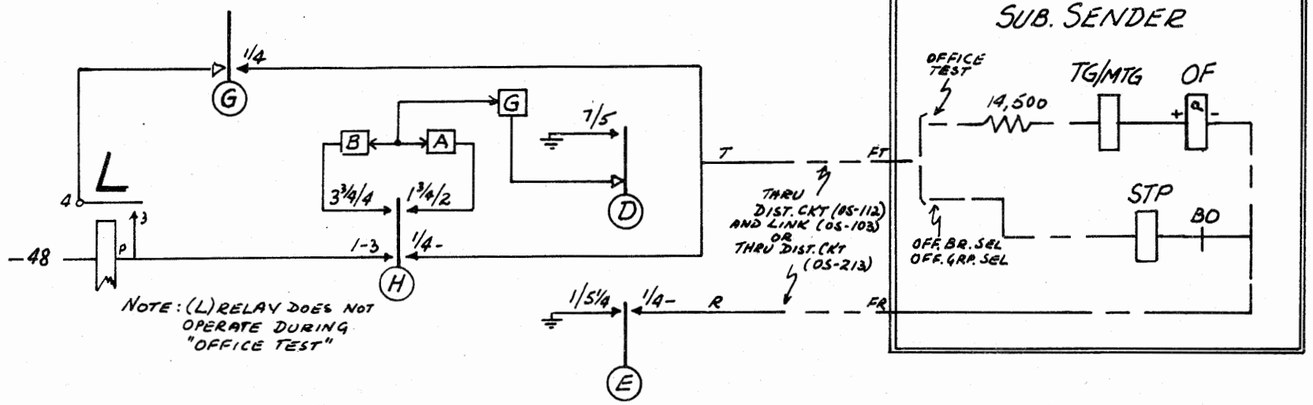

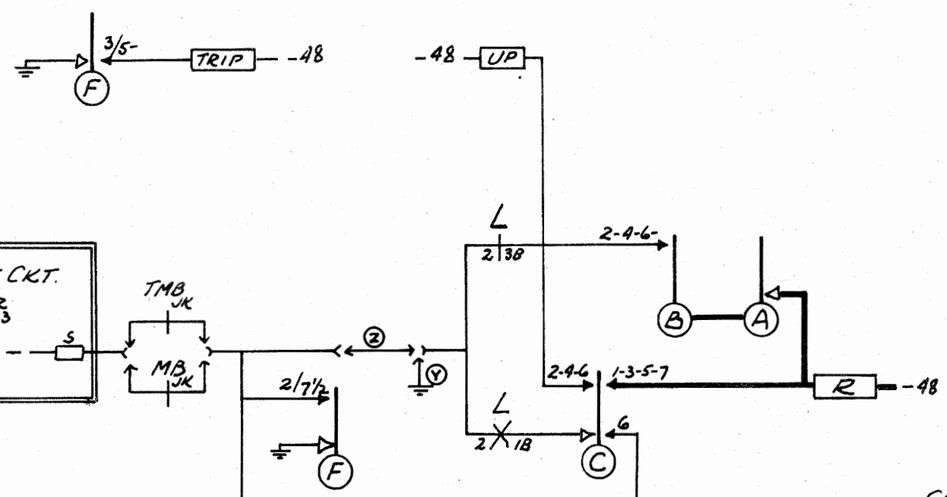

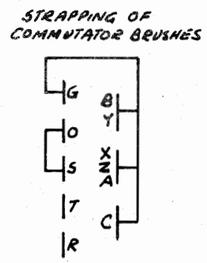

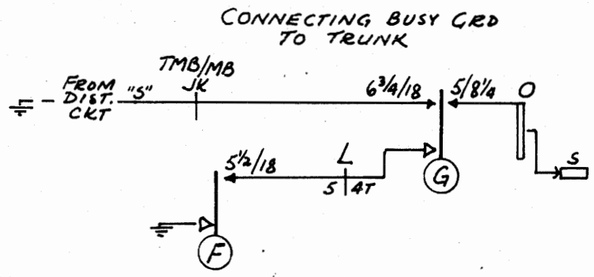

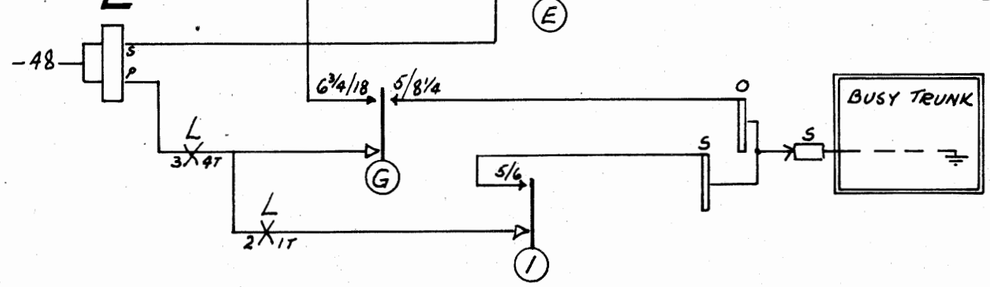

SEQUENCE CHART

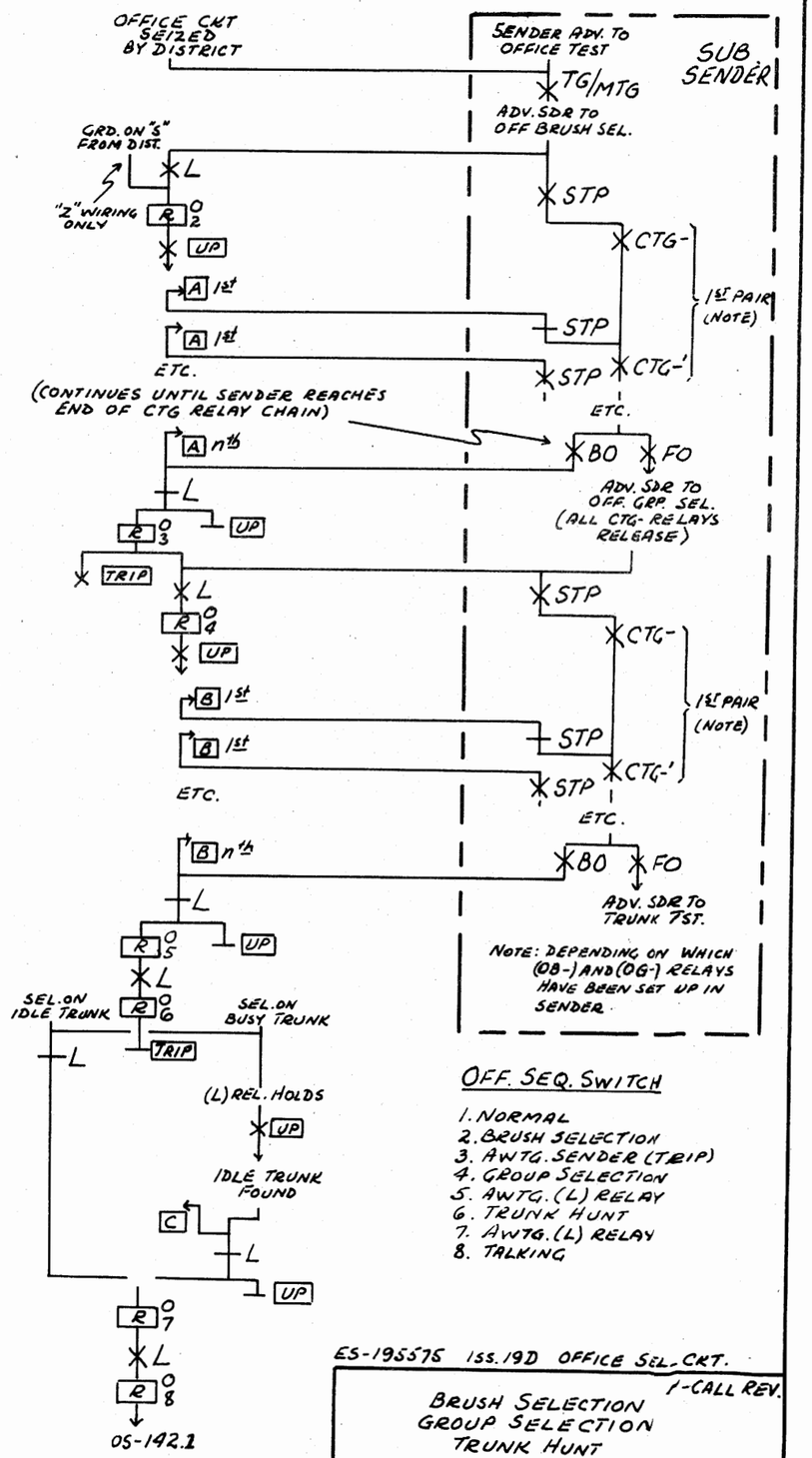

OFF. SEQ. SWITCH

1. NORMAL
2. BRUSH SELECTION
3. AWTG. SENDER (TRIP)
4. GROUP SELECTION
5. AWTG. (L) RELAY
6. TRUNK HUNT
7. AWTG. (L) RELAY
8. TALKING

ISSUE	DATE	BY
1	9-34	GHH

ES-195575 ISS. 19D OFFICE SEL. CKT.

1-CALL REV.

BRUSH SELECTION
GROUP SELECTION
TRUNK HUNT

PANEL GCO

OS-141.1

ILL. BELL TEL. CO.- PLANT SCHOOL

OFFICE SEL. CKT.

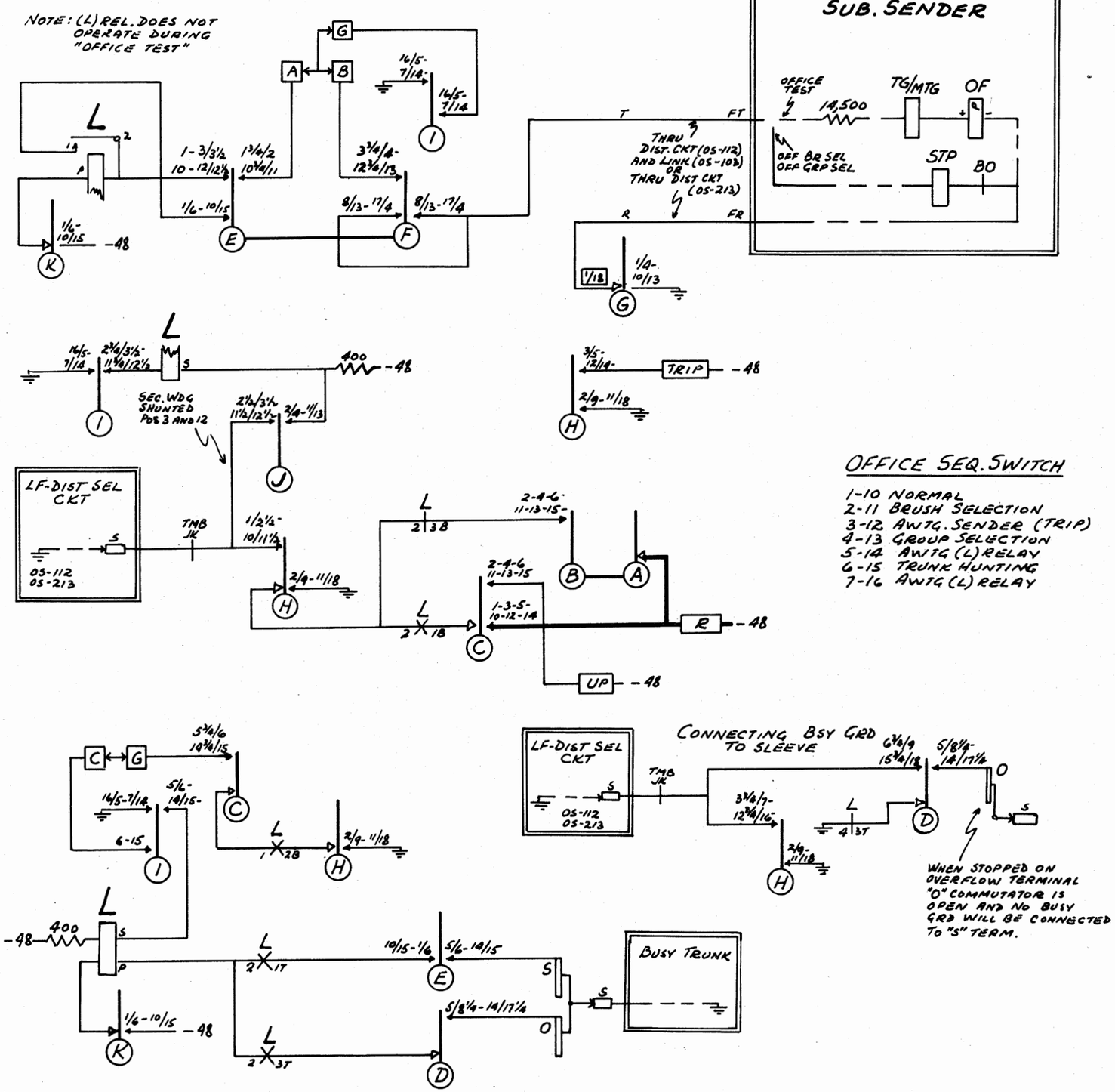

OFFICE SEQ. SWITCH

1-10 NORMAL
2-11 BRUSH SELECTION
3-12 AWTG. SENDER (TRIP)
4-13 GROUP SELECTION
5-14 AWTG (L) RELAY
6-15 TRUNK HUNTING
7-16 AWTG (L) RELAY

SEQUENCE CHART

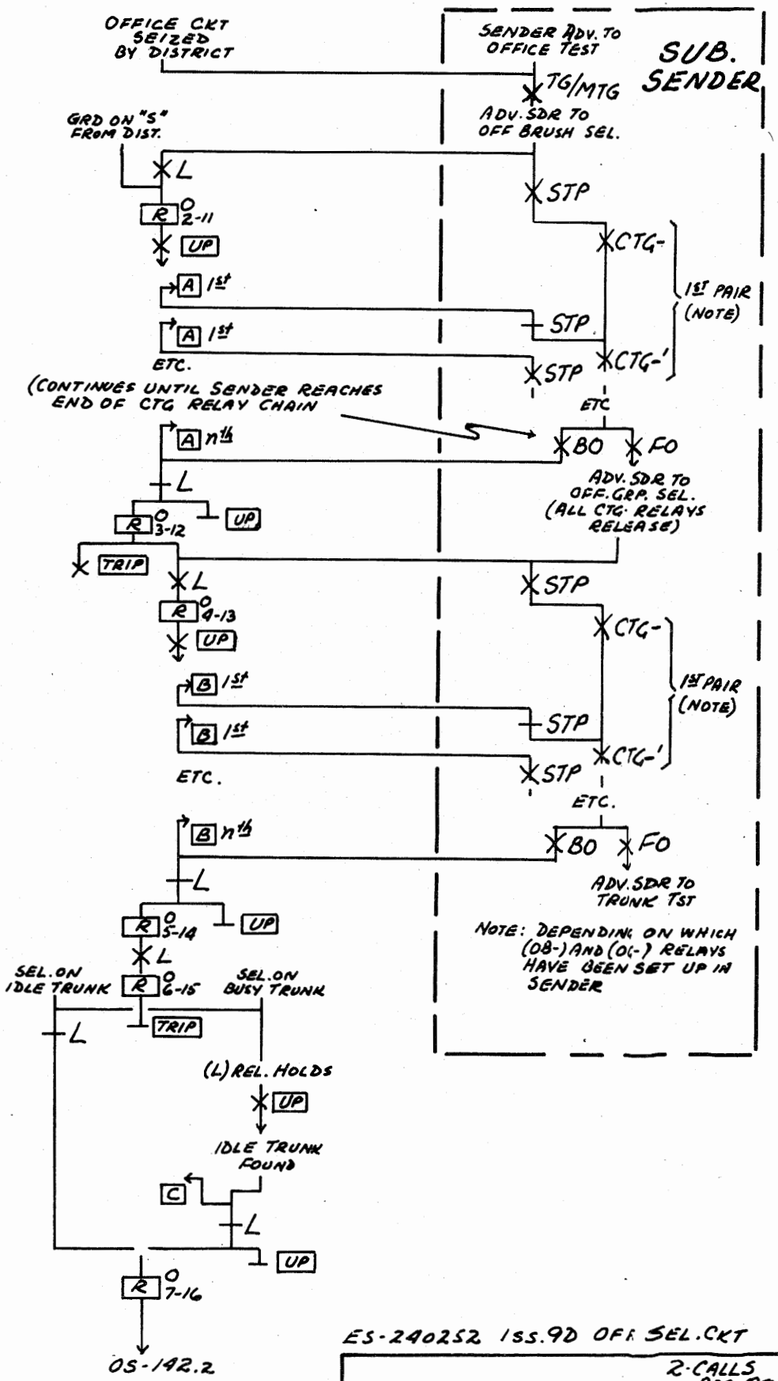

ES-240252 ISS. 9D OFF. SEL. CKT

2-CALLS PER REV.

BRUSH AND GROUP SELECTION
TRUNK HUNT

PANEL GCO

OS-141.2

ISSUE	DATE	BY
1	8-54	GH/NS

ILL. BELL TEL. CO — PLANT SCHOOL

SEQUENCE CHART

OFFICE SEL. CKT.

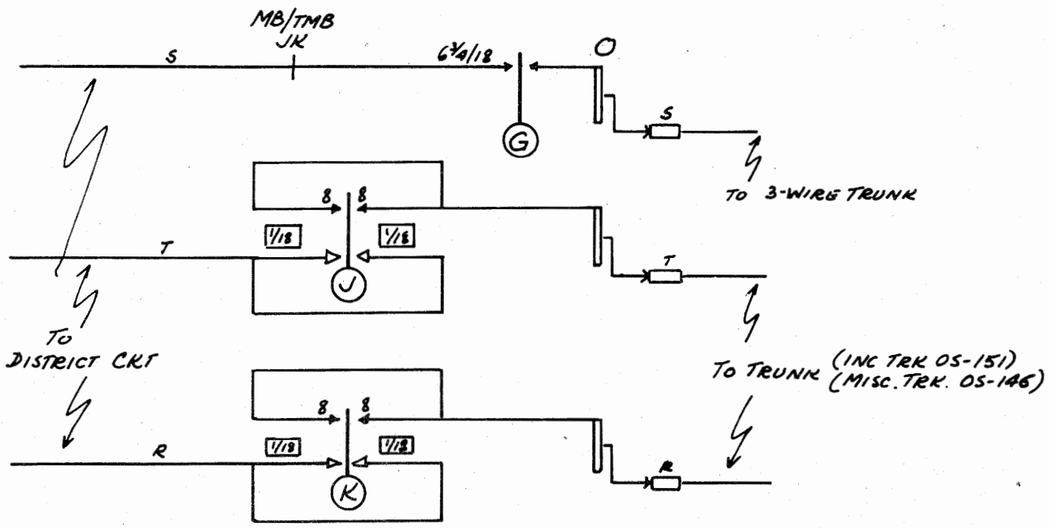

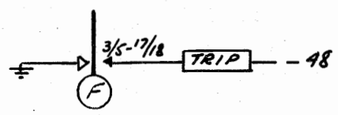

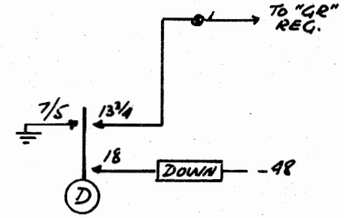

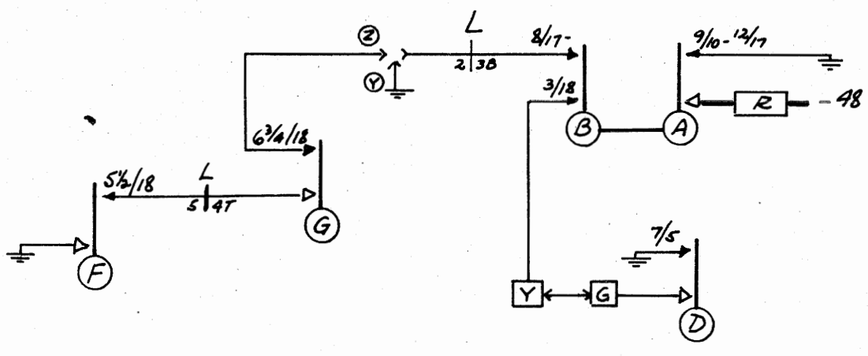

OFFICE SEQ. SWITCH

8. TALKING
9. PASS-BY
10. " "
11. OVERFLOW
12. PASS-BY
13. " "
14. " "
15. " "
16. " "
17. " "
18. RETURN

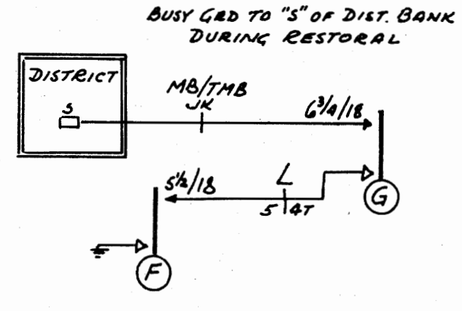

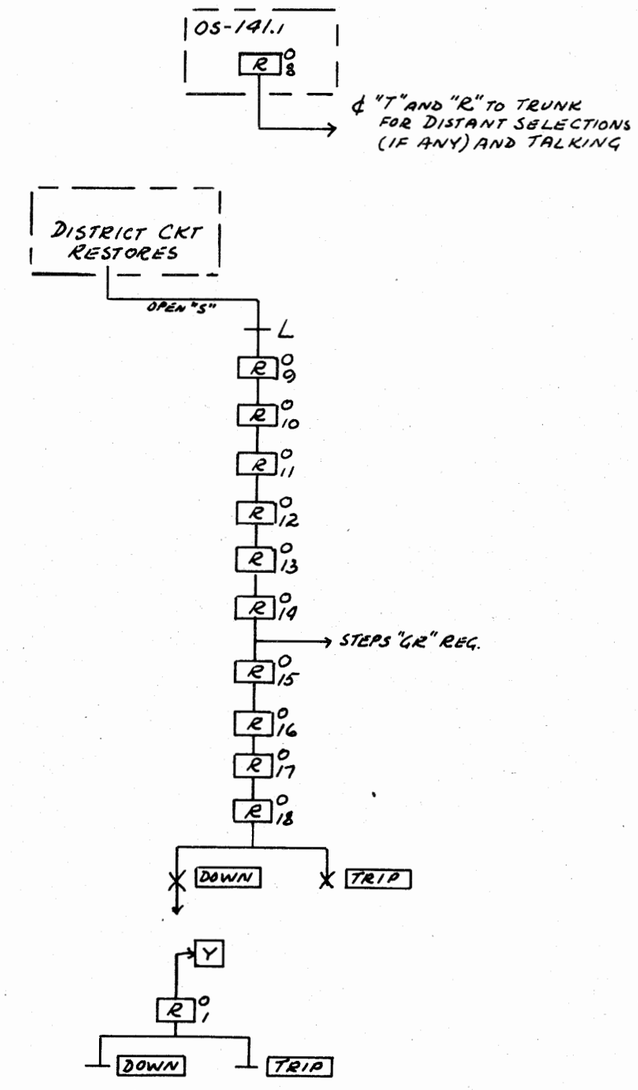

ISSUE	DATE	BY
1	9-54	GHN

ES-195575 Iss. 19D OFFICE SEL. CKT

1-CALL REV.

TALKING RELEASE

PANEL GCO

OS-142.1

ILL. BELL TEL. CO. — PLANT SCHOOL

OFFICE SEL. CKT.

SEQUENCE CHART

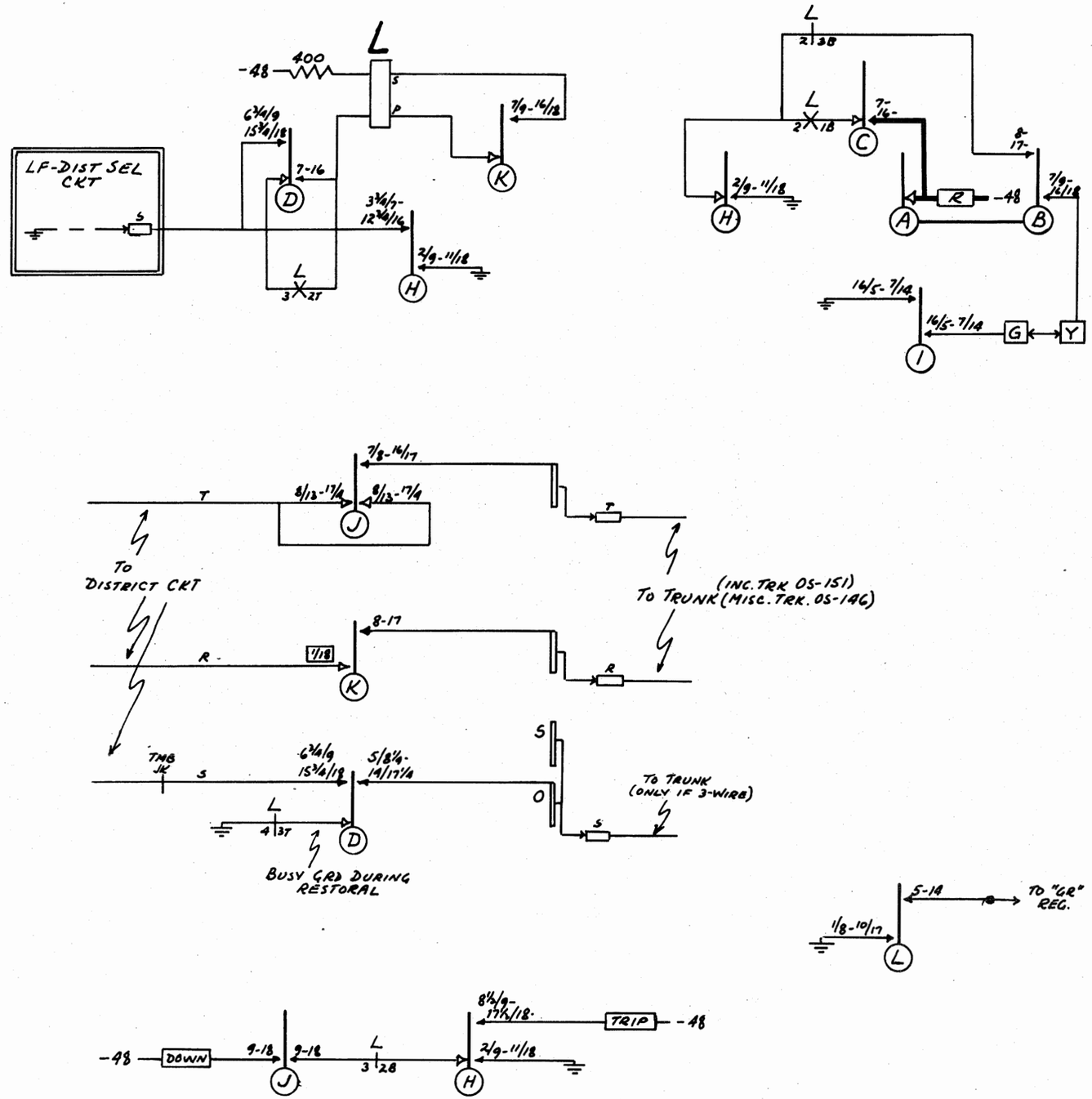

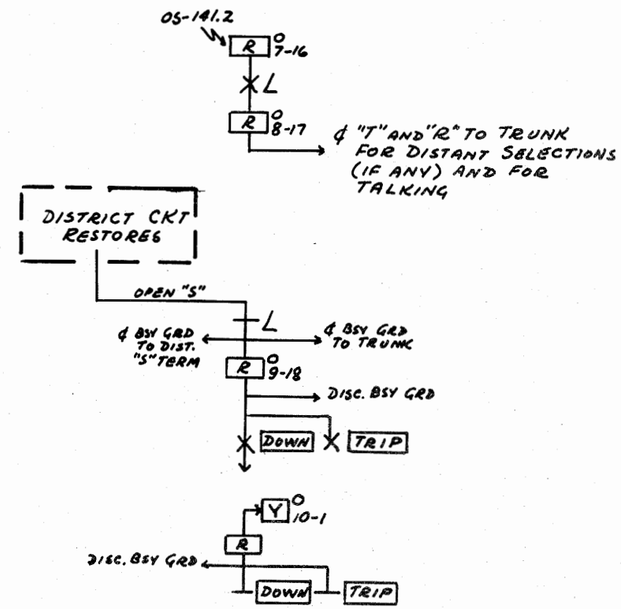

OFFICE SEQ. SWITCH

7-16 AWTG (L) RELAY
8-17 TALKING
9-18 RETURN AND OVERFLOW

ISSUE	1	
DATE	8-5-4	SN/HG
BY		

ES-240252 Iss. 9D OFF. SEL. CKT

2 CALLS PER REV.

TALKING RELEASE

PANEL GCO

OS-142.2

OFFICE SEL. CKT.

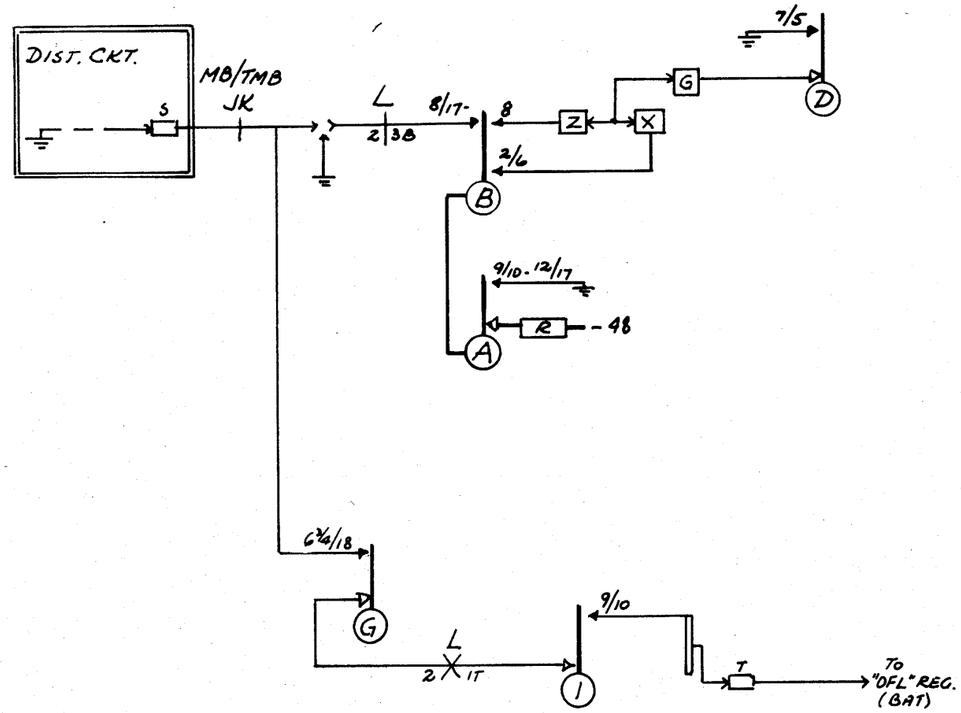

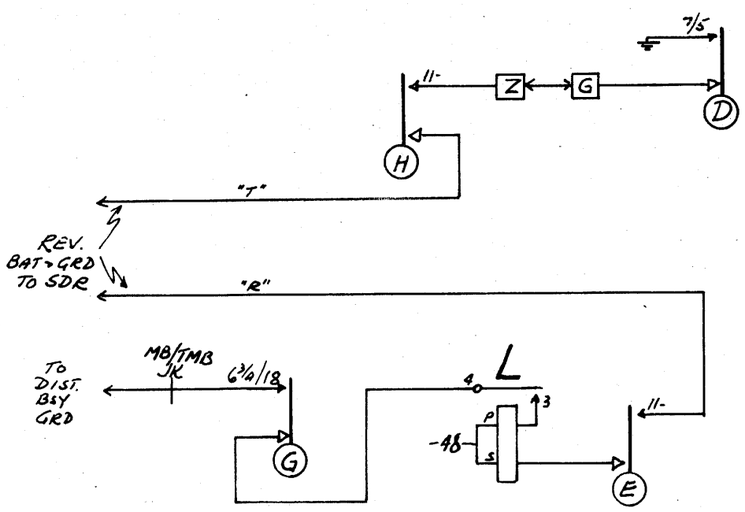

SEQUENCE CHART

TELL-TALE

SELECTOR TRAVELS TO TOP OF BANK (TELL-TALE)

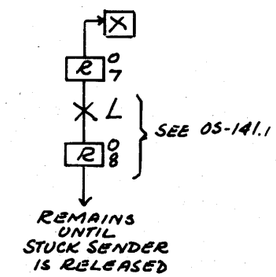

OVERFLOW

OFFICE SELECTOR HUNTS TRUNK FINDS ALL TRUNKS BUSY (STOPS ON "OFL" TERM, WHICH TESTS IDLE)

NOTE: SINCE "O" COMMUTATOR SEGMENT IS OPEN WHEN SEL. IS ON OFL. TERM., THERE WILL BE NO BUSY GRD. ON "S" OFL. TERM. EVEN IF OTHER SELS. ARE ALSO ON SAME TERM.

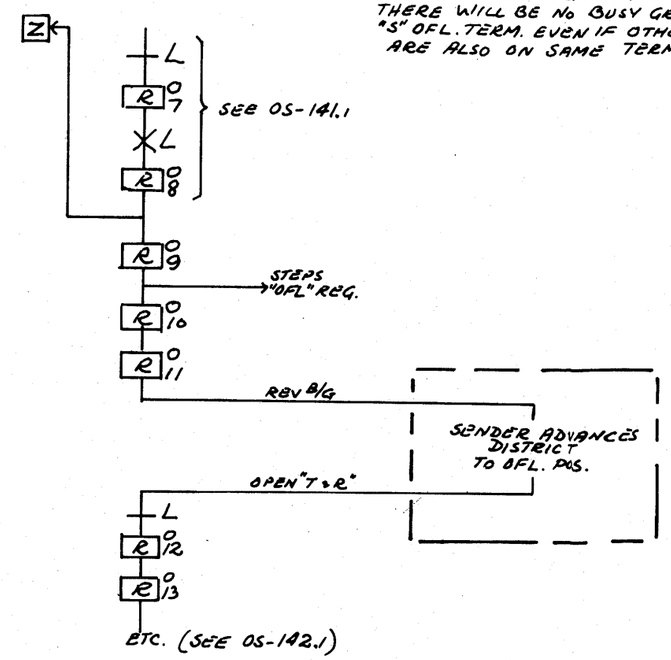

OFFICE SEQ. SWITCH

7. AWTG. (L) RELAY
8. TALKING
9. PASS-BY
10. " "
11. OVERFLOW
12. PASS-BY
13. " "
14. " "
15. " "
16. " "
17. " "
18. RETURN

ISSUE	DATE	BY
1	9-54	GHH

ES-195575 Iss. 19D OFFICE SEL. CKT

1-CALL REV.

MISC. FEATURES
(1) TELL-TALE
(2) OVERFLOW

PANEL GCO

OS-143.1

OFFICE SEL. CKT

OVER FLOW

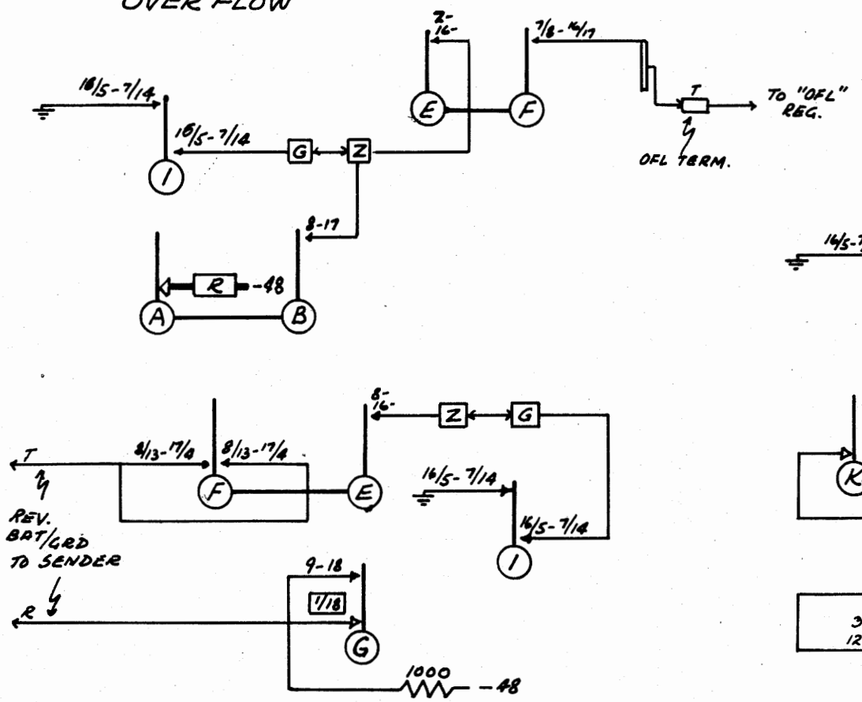

SELF-RESTORAL

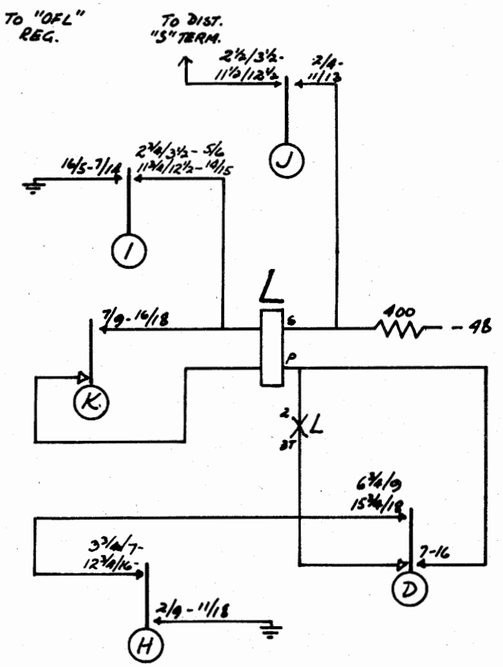

TELL-TALE

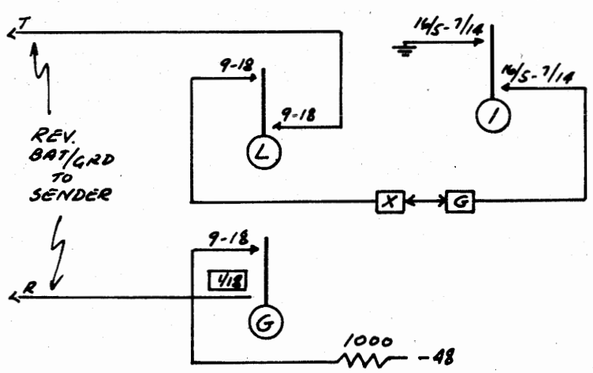

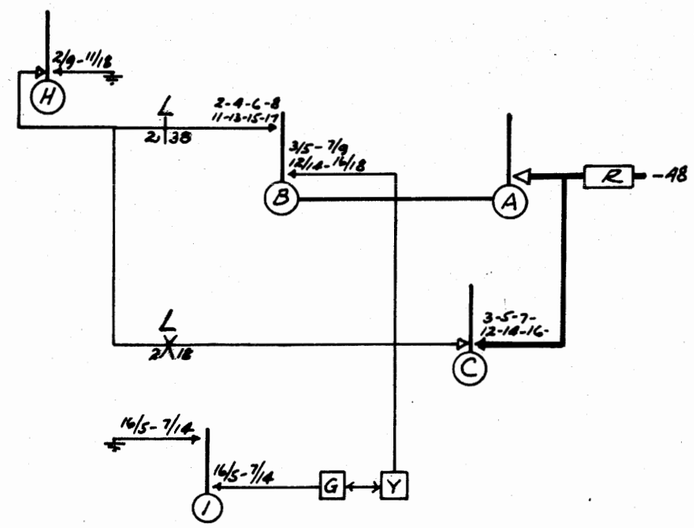

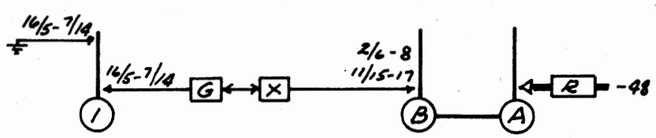

SEQUENCE CHART

(A) OVERFLOW

OFFICE SELECTOR HUNTS TRUNK FINDS ALL TRUNKS BUSY (STOPS ON "OFL" TERM. WHICH TESTS IDLE)

NOTE: SINCE "O" COMMUTATOR SEGMENT IS OPEN WHEN SEL. IS ON "OFL" TERM. THERE WILL BE NO BUSY GRD ON "S" OFL TERM. EVEN IF OTHER SELECTORS ARE ALSO ON SAME TERM.

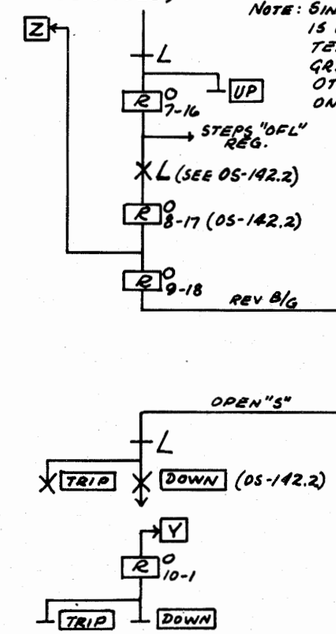

(B) TELL-TALE

SELECTOR TRAVELS TO TOP OF BANK (TELL-TALE)

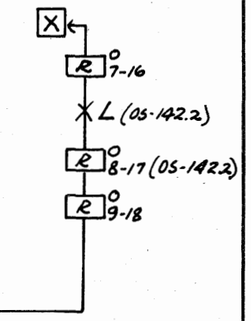

(C) SELF-RESTORAL

SEL. ROD OFF-NORMAL. SEQ. SWITCH POS 3 (NO DISTRICT)

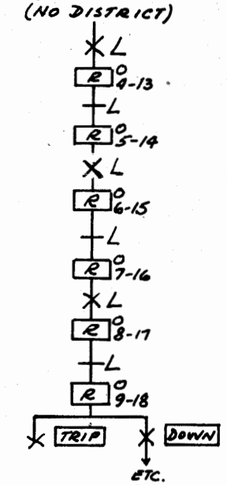

SEL. ROD NORMAL. SWITCH MOVED OFF-NORMAL

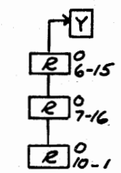

OFFICE SEQ. SWITCH

1-10 NORMAL
2-11 BRUSH SELECTION
3-12 AWTG. SENDER
4-13 GROUP SELECTION
5-14 AWTG (L) RELAY
6-15 TRUNK HUNT
7-16 AWTG (L) RELAY
8-17 TALKING
9-18 OVERFLOW – RETURN

ES-240252 ISS. 9D OFF. SEL. CKT

2 CALLS PER REV.

MISC. FEATURES:
(A) OVERFLOW
(B) TELL-TALE
(C) SELF-RESTORAL (POS 3)

ISSUE	1
DATE	8-54
BY	GH/NS

PANEL GCO

OS-143.2

ILL. BELL TEL. CO – PLANT SCHOOL

INC. SEL. CKT

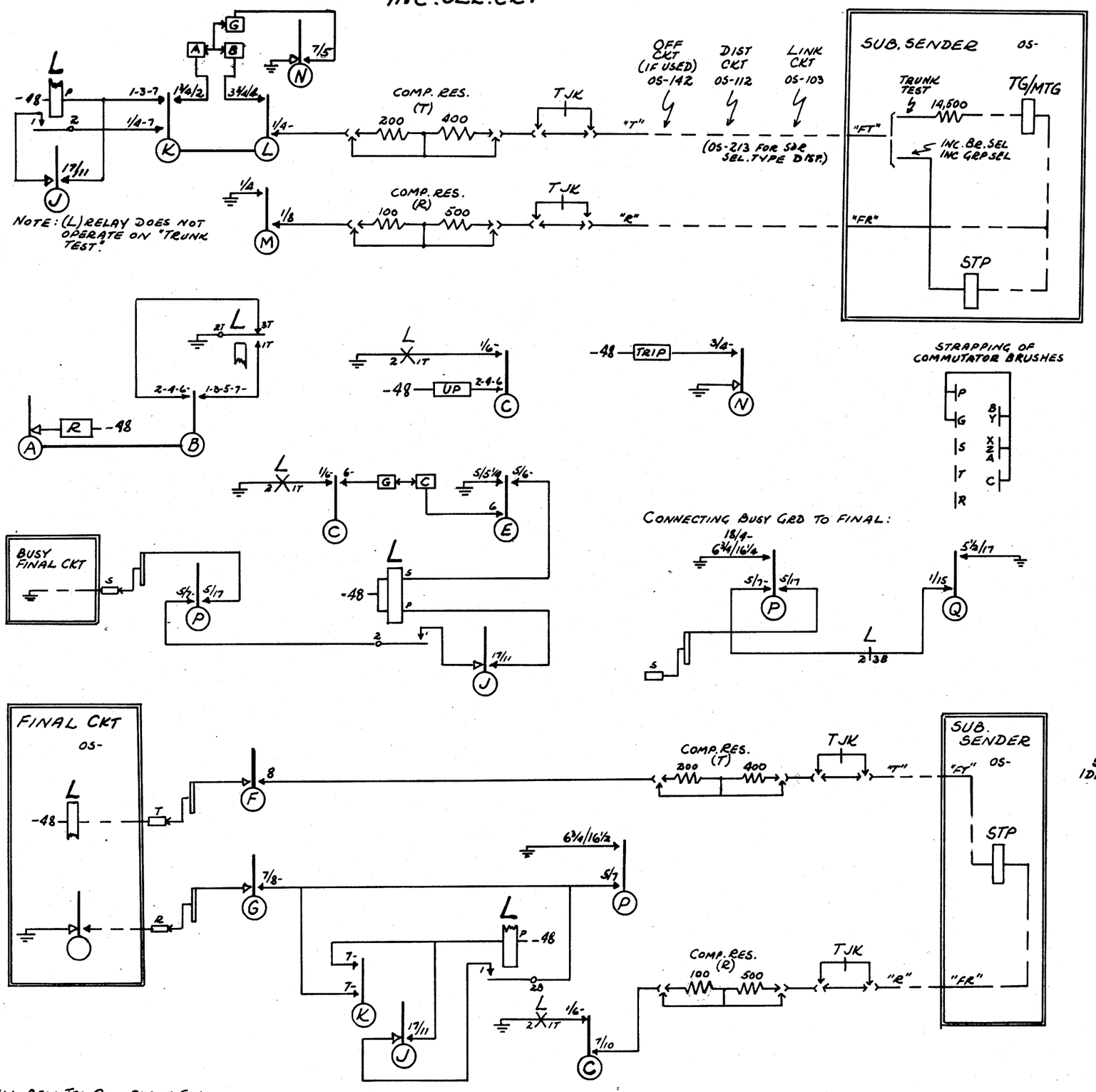

SEQUENCE CHART

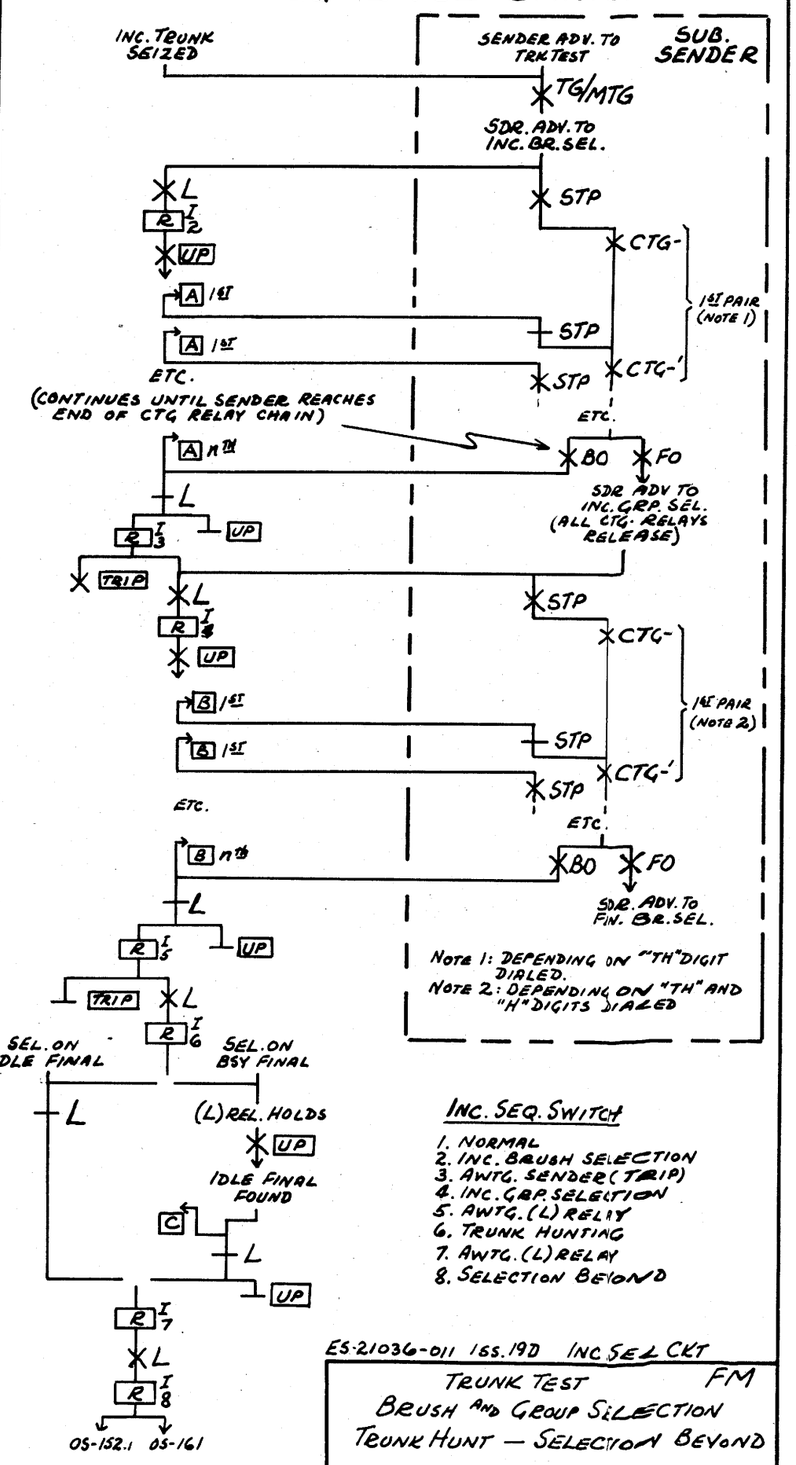

INC. SEQ. SWITCH

1. NORMAL
2. INC. BRUSH SELECTION
3. AWTG. SENDER (TRIP)
4. INC. GRP. SELECTION
5. AWTG. (L) RELAY
6. TRUNK HUNTING
7. AWTG. (L) RELAY
8. SELECTION BEYOND

ISSUE	DATE	BY
1	7-54	GHH

ES-21036-011 ISS. 1 ID INC SEL CKT

TRUNK TEST — FM
BRUSH AND GROUP SELECTION
TRUNK HUNT — SELECTION BEYOND

PANEL GCO

OS-151.1

ILL. BELL TEL. CO. — PLANT SCHOOL

INC. SEL. CKT

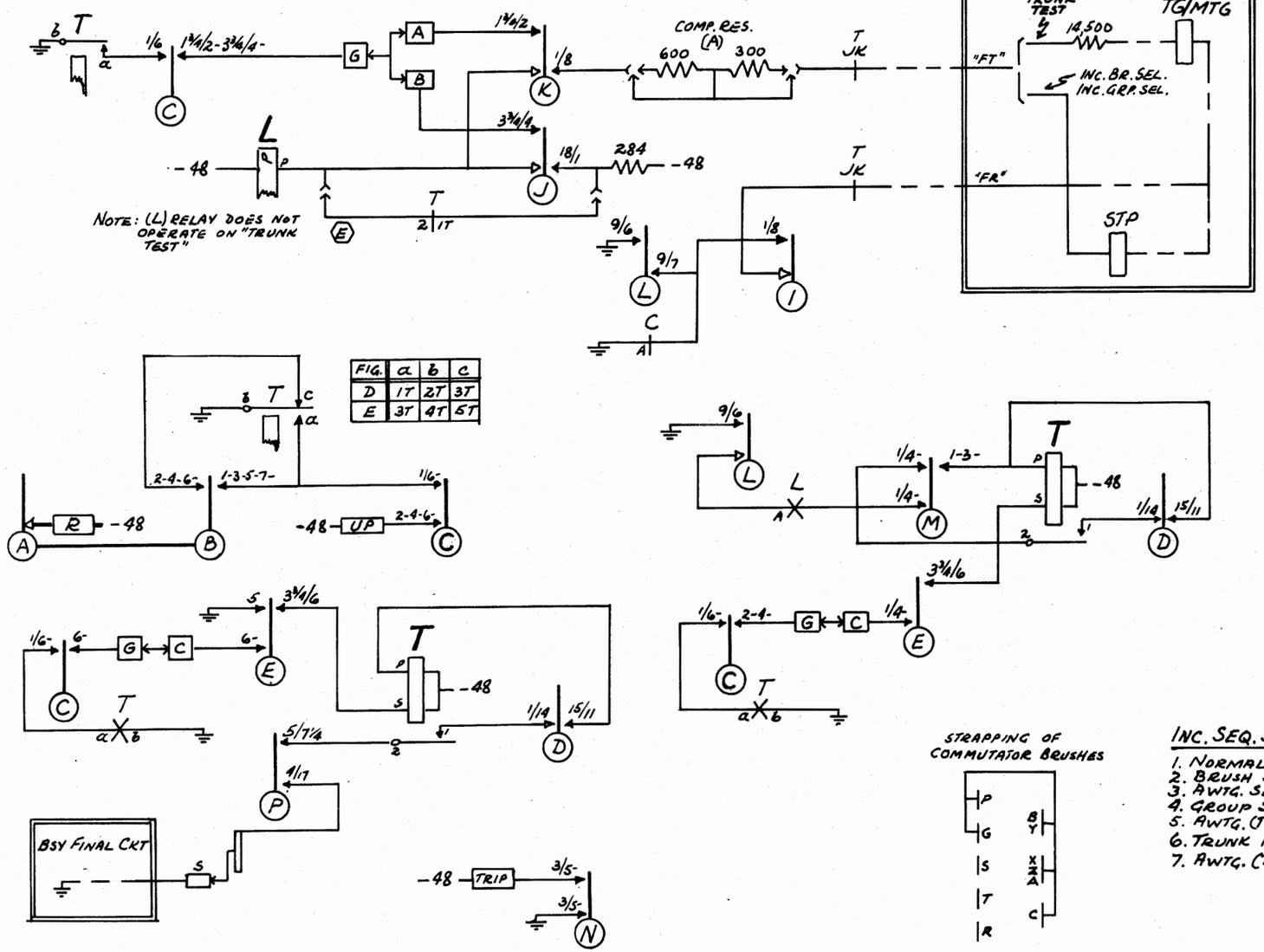

FIG.	a	b	c
D	1T	2T	3T
E	3T	4T	5T

CONNECTING BSY GRD TO FINAL:

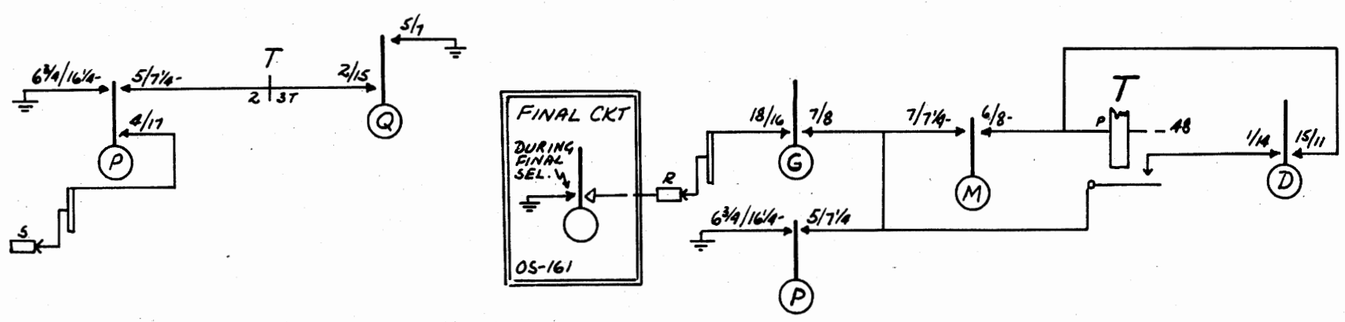

STRAPPING OF COMMUTATOR BRUSHES

INC. SEQ. SWITCH

1. NORMAL
2. BRUSH SELECTION
3. AWTG. SENDER (TRIP)
4. GROUP SELECTION
5. AWTG. (T) RELAY
6. TRUNK HUNT
7. AWTG. (T) RELAY

SEQUENCE CHART

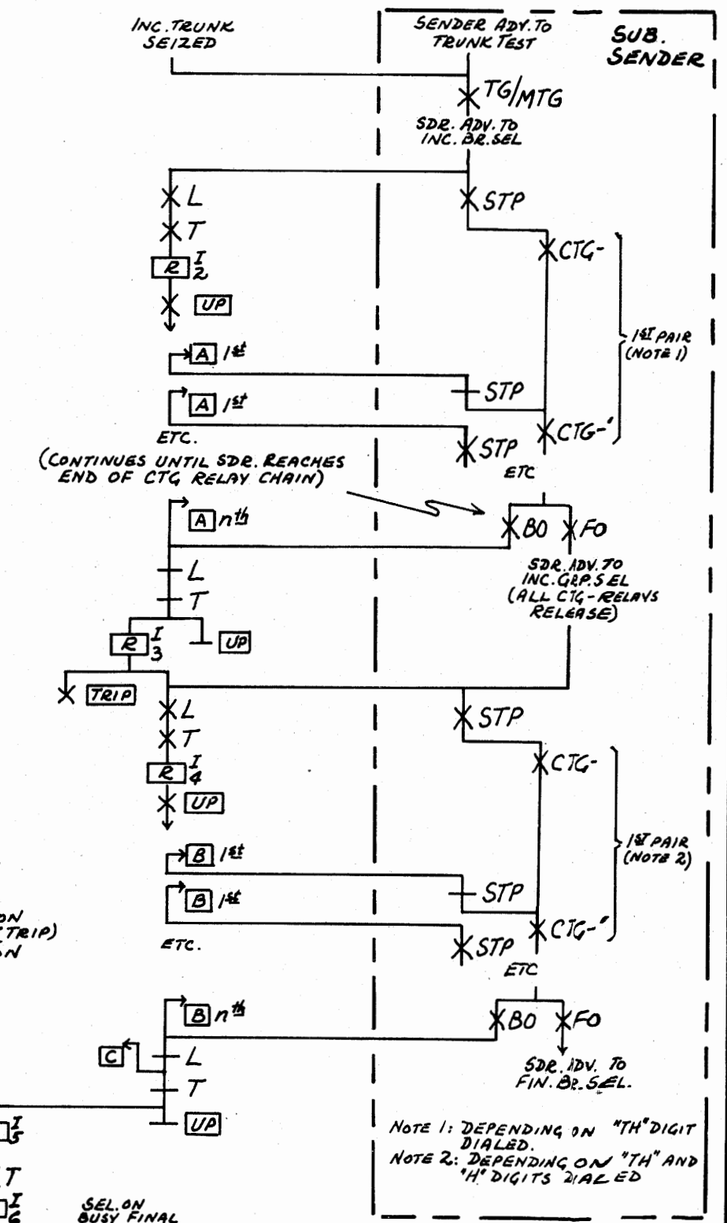

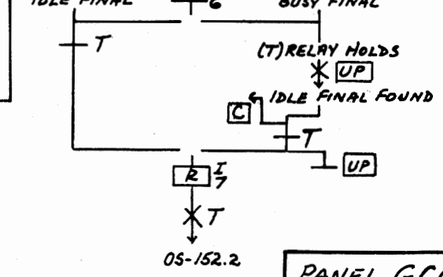

ES-20292-011 ISS. 22D INC. SEL. CKT

ISSUE	1	
DATE	7-54	
BY	GHH	

TRUNK TEST
BRUSH AND GROUP SELECTION
TRUNK HUNT

REPT

PANEL GCO

OS-151.2

ILL. BELL TEL. CO. — PLANT SCHOOL

INC. SEL. CKT.

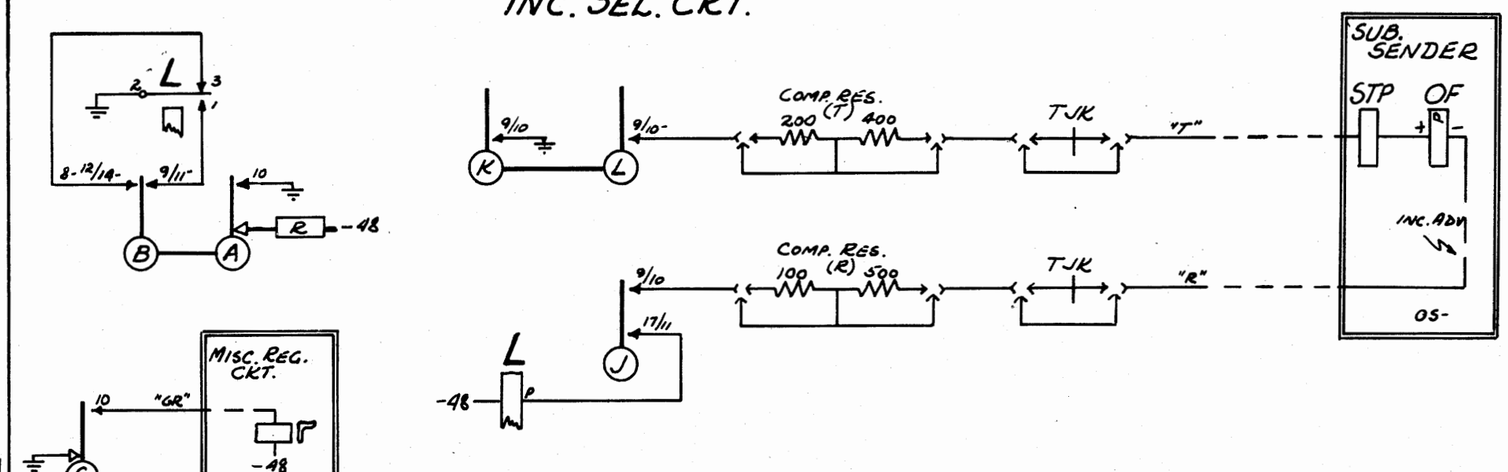

SEQUENCE CHART

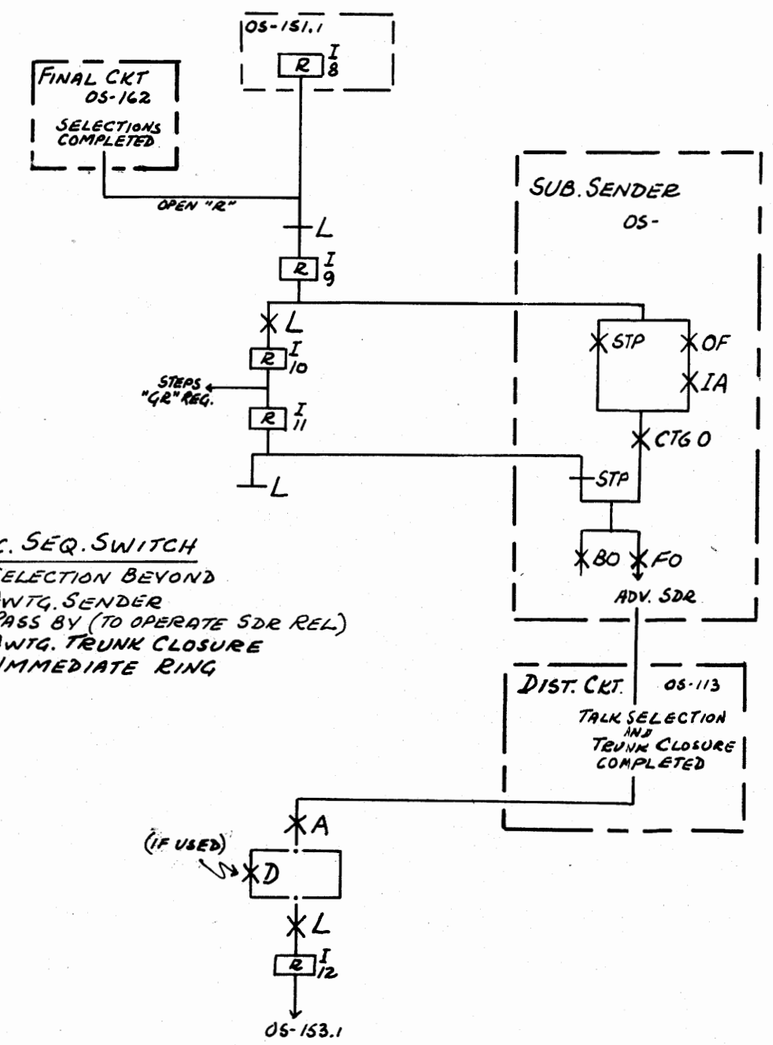

Ⓠ = WITH "IMMEDIATE RING" (POS 12 AND 13)
Ⓖ = WITHOUT "IMMEDIATE RING"

Ⓜ = TRUNK FROM TANDEM
Ⓝ OR Ⓗ = OTHER TRUNKS ("H" SPECIAL)

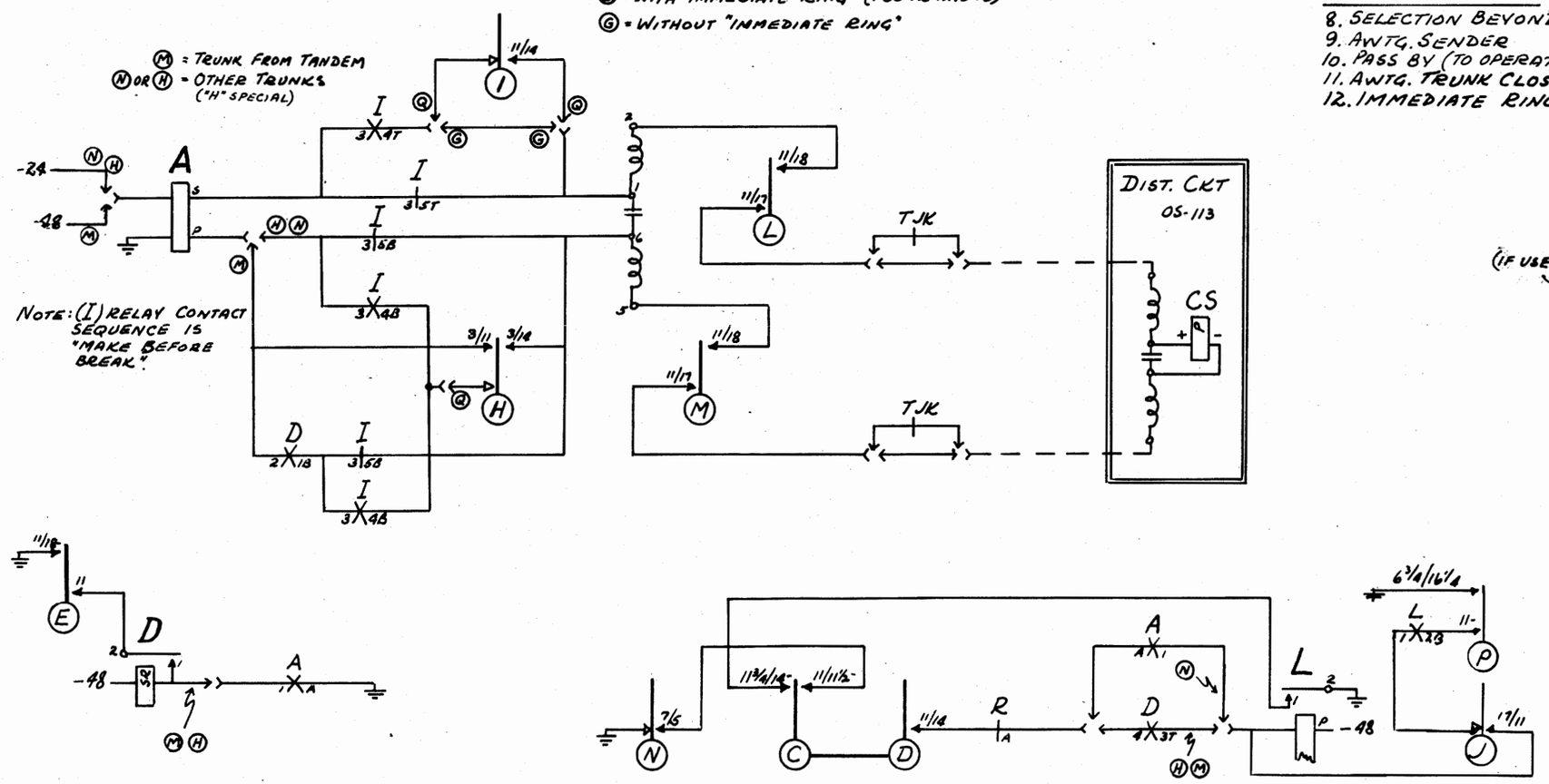

INC. SEQ. SWITCH

8. SELECTION BEYOND
9. AWTG. SENDER
10. PASS BY (TO OPERATE SDR REL)
11. AWTG. TRUNK CLOSURE
12. IMMEDIATE RING

NOTE: (I) RELAY CONTACT SEQUENCE IS "MAKE BEFORE BREAK."

ISSUE	DATE	BY
1	7-54	CHH

ES-21036-011 ISS. 19D INC. SEL. CKT

FM

INCOMING ADVANCE TRUNK CLOSURE

PANEL GCO

OS-152.1

ILL. BELL TEL. CO. – PLANT SCHOOL

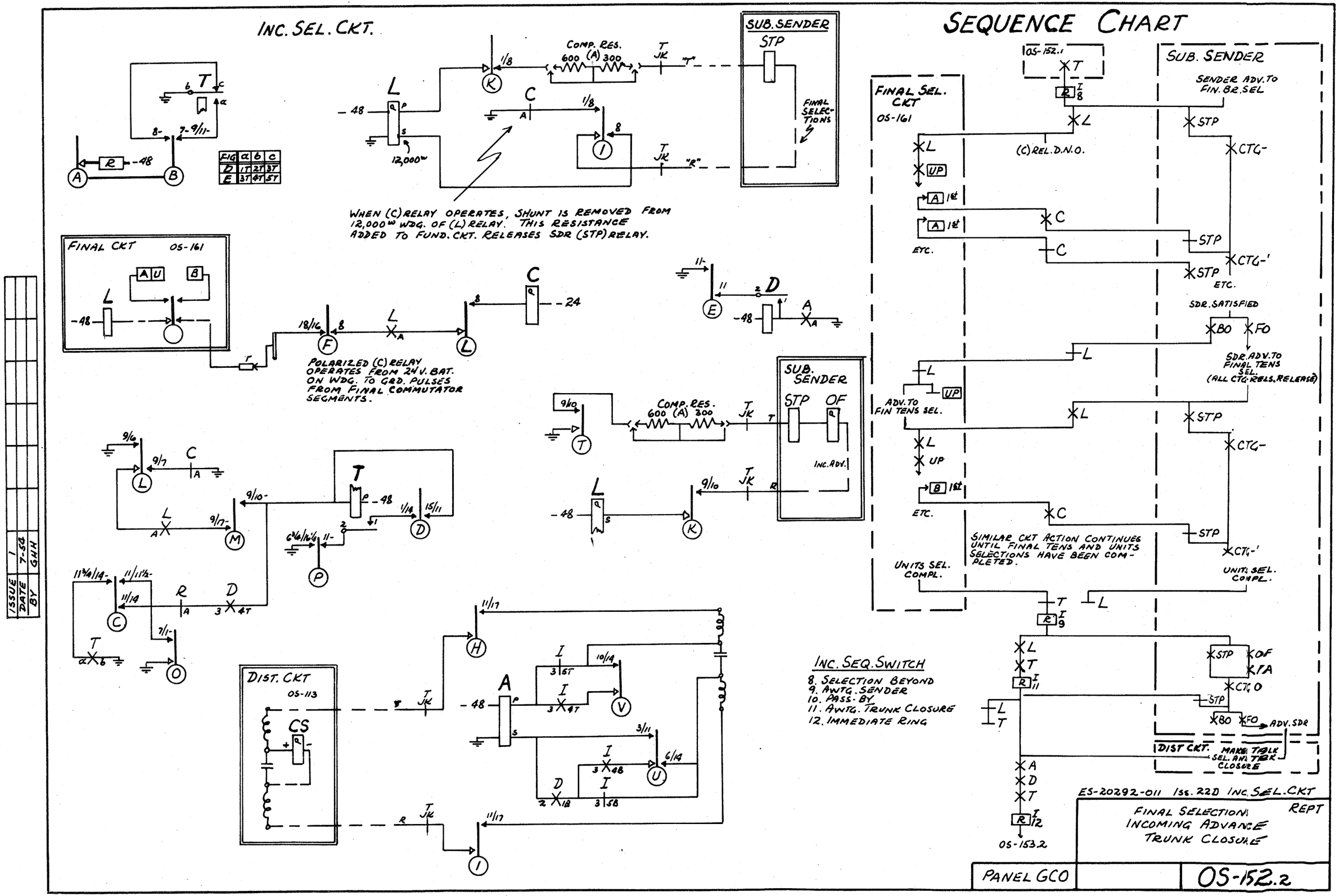
INC. SEL. CKT.
SEQUENCE CHART
SUB. SENDER
STP
FINAL SELECTIONS
COMP. RES.
600 (A) 300
12,000ω
WHEN (C) RELAY OPERATES, SHUNT IS REMOVED FROM 12,000ω WDG. OF (L) RELAY. THIS RESISTANCE ADDED TO FUND. CKT. RELEASES SDR (STP) RELAY.
FINAL CKT 05-161
POLARIZED (C) RELAY OPERATES FROM 24V. BAT. ON WDG. TO GRD. PULSES FROM FINAL COMMUTATOR SEGMENTS.
SUB. SENDER
STP OF
INC. ADV.
DIST. CKT
05-113
CS
INC. SEQ. SWITCH
8. SELECTION BEYOND
9. AWTG. SENDER
10. PASS-BY
11. AWTG. TRUNK CLOSURE
12. IMMEDIATE RING
05-152.1
FINAL SEL. CKT
05-161
(C) REL. D.N.O.
ETC.
SIMILAR CKT ACTION CONTINUES UNTIL FINAL TENS AND UNITS SELECTIONS HAVE BEEN COMPLETED.
UNITS SEL. COMPL.
ADV. TO FIN TENS SEL.
05-153.2
SUB. SENDER
SENDER ADV. TO FIN. BR. SEL
SDR. SATISFIED
SDR. ADV. TO FINAL TENS SEL. (ALL CTG. RELS. RELEASE)
ADV. SDR
DIST CKT.
MARK TALK SEL. AND TRK CLOSURE
ES-20292-011 Iss. 22D INC. SEL. CKT
FINAL SELECTIONS INCOMING ADVANCE TRUNK CLOSURE
REPT
PANEL GCO
OS-152.2
ISSUE 1
DATE 7-54
BY GHN

INC. SEL. CKT.

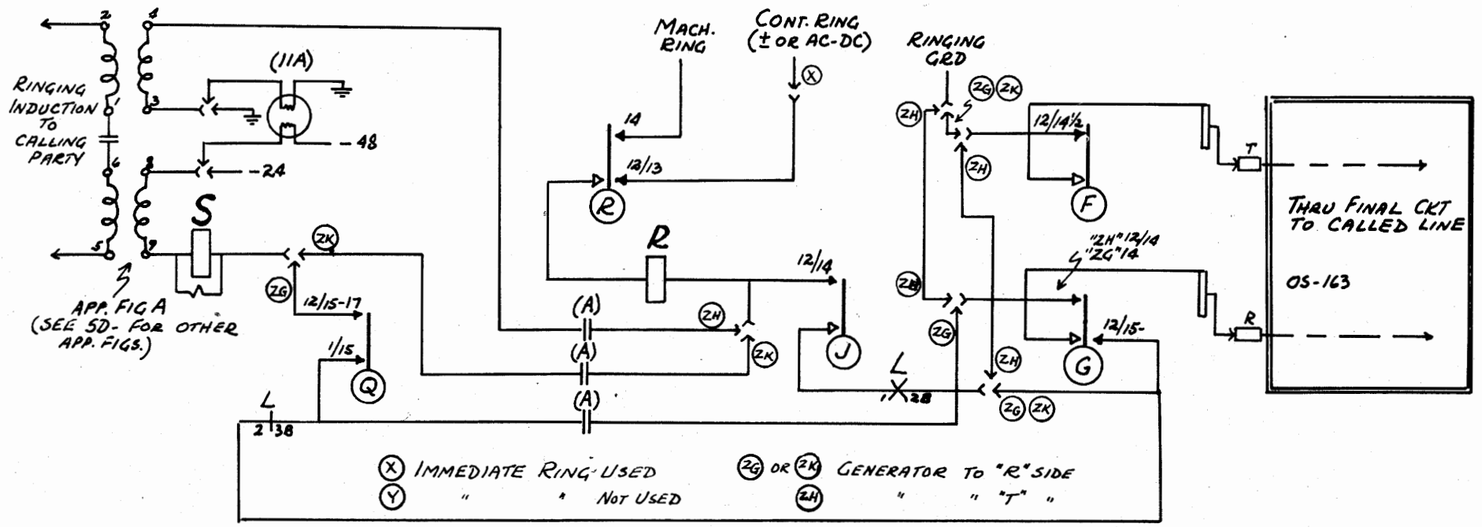

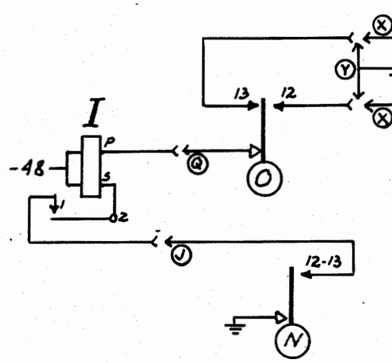

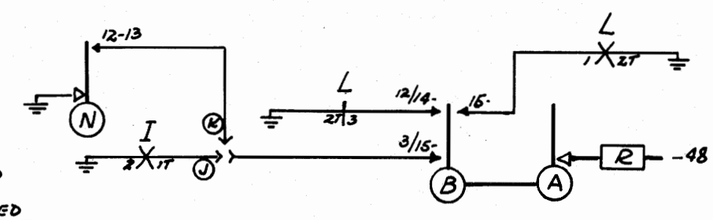

IMMEDIATE RING EQUIPPED AND USED.
IMMEDIATE RING EQUIPPED BUT MODIFIED TO BE OMITTED
IMMEDIATE RING NOT EQUIPPED

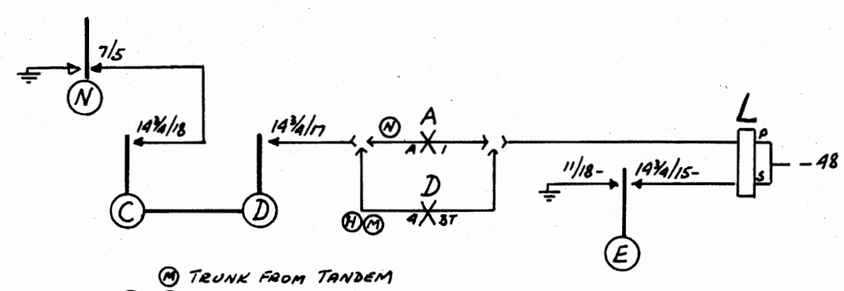

TRUNK FROM TANDEM
OTHER TRUNKS ("H" SPECIAL)

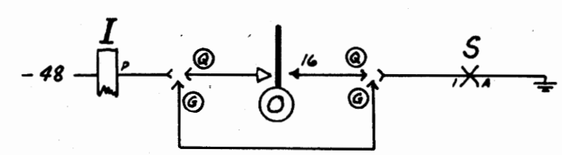

SEQUENCE CHART

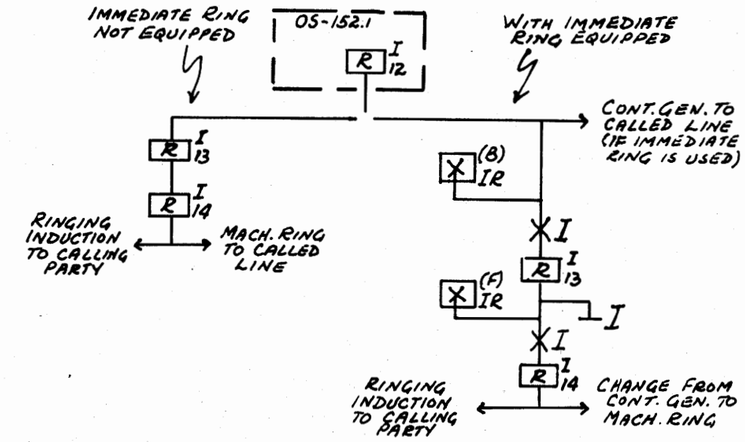

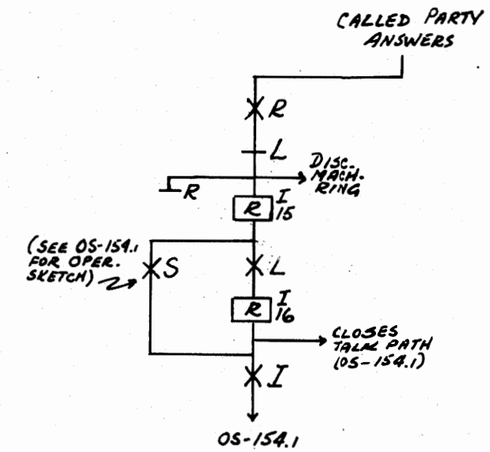

INC. SEQ. SWITCH

12. IMMEDIATE RING (AWTG. INT. "B" CONTACT)
13. " " " " "F" "
14. RINGING WITH INTERVALS
15. AWTG. (L) RELAY
16. TALKING

ES-2J036-011 Iss. 19D INC SEL CKT

FM

RINGING AND TRIPPING ADVANCE TO TALK POSITION

PANEL GCO

OS-153.1

ISSUE 1 | DATE 7-54 | BY GHH

INC. SEL. CKT.

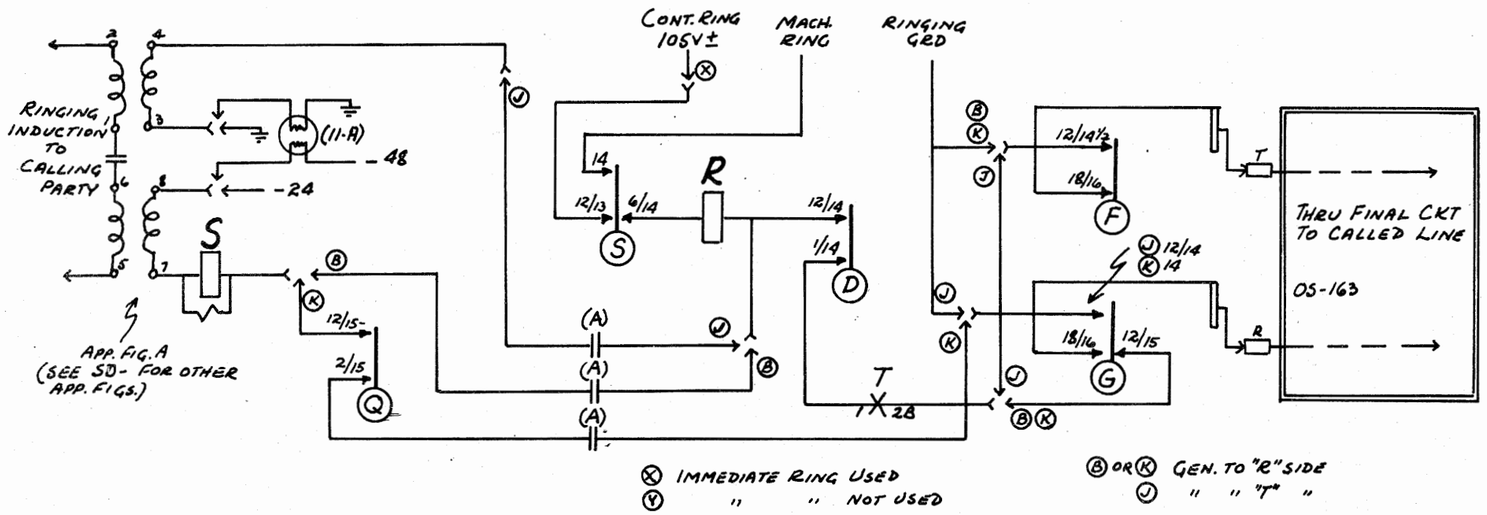

SEQUENCE CHART

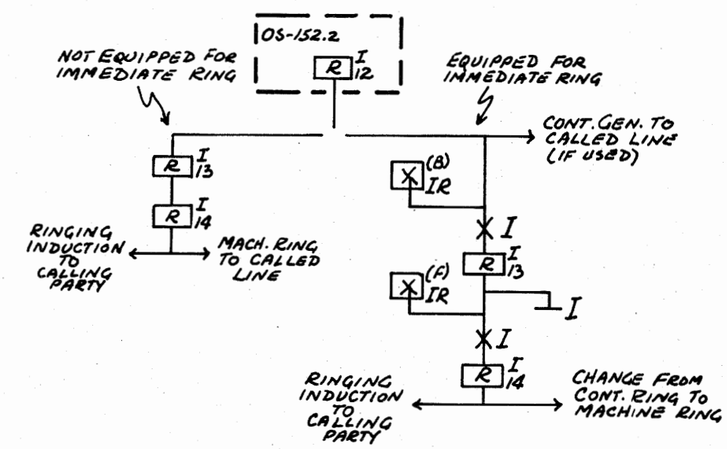

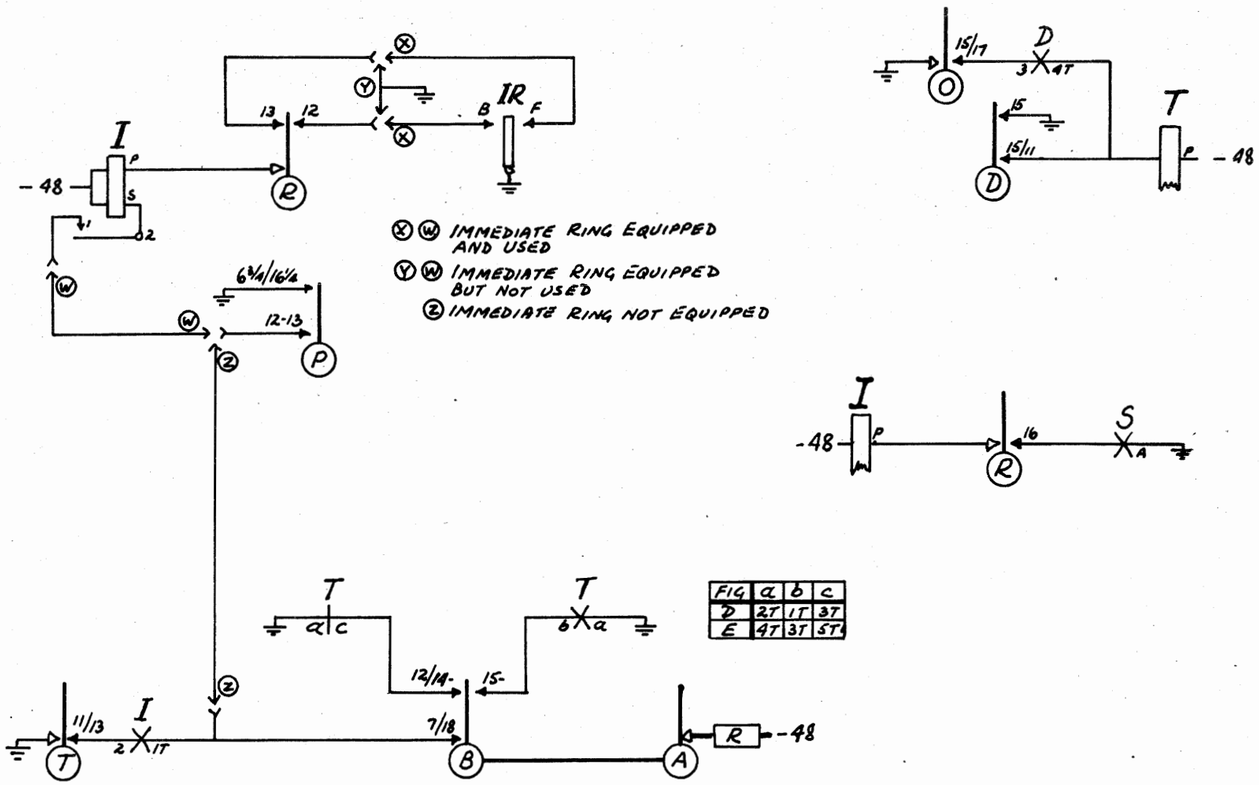

FIG	a	b	c
D	2T	1T	3T
E	4T	3T	5T

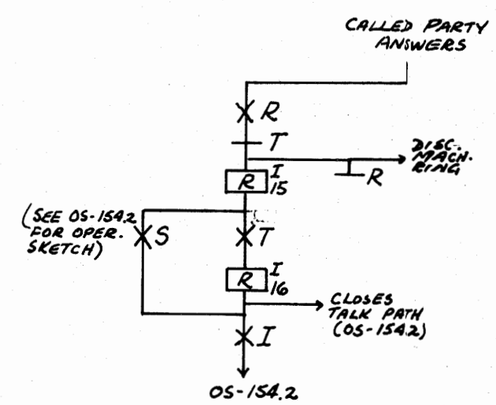

INC. SEQ. SWITCH

12. IMMEDIATE RING (AWTG: INT. "B" CONTACT)
13. IMMEDIATE RING (AWTG. INT. "F" CONTACT)
14. RINGING WITH INTERVALS
15. AWTG. (T) RELAY
16. TALKING

ISSUE	DATE	BY
1	7-54	GHH

ES-20292-011 Iss. 22-D INC. SEL. CKT

REPT

RINGING AND TRIPPING ADVANCE TO TALK POSITION

PANEL GCO

OS-153.2

ILL. BELL TEL. CO. - PLANT SCHOOL

INC. SEL. CKT

SEQUENCE CHART

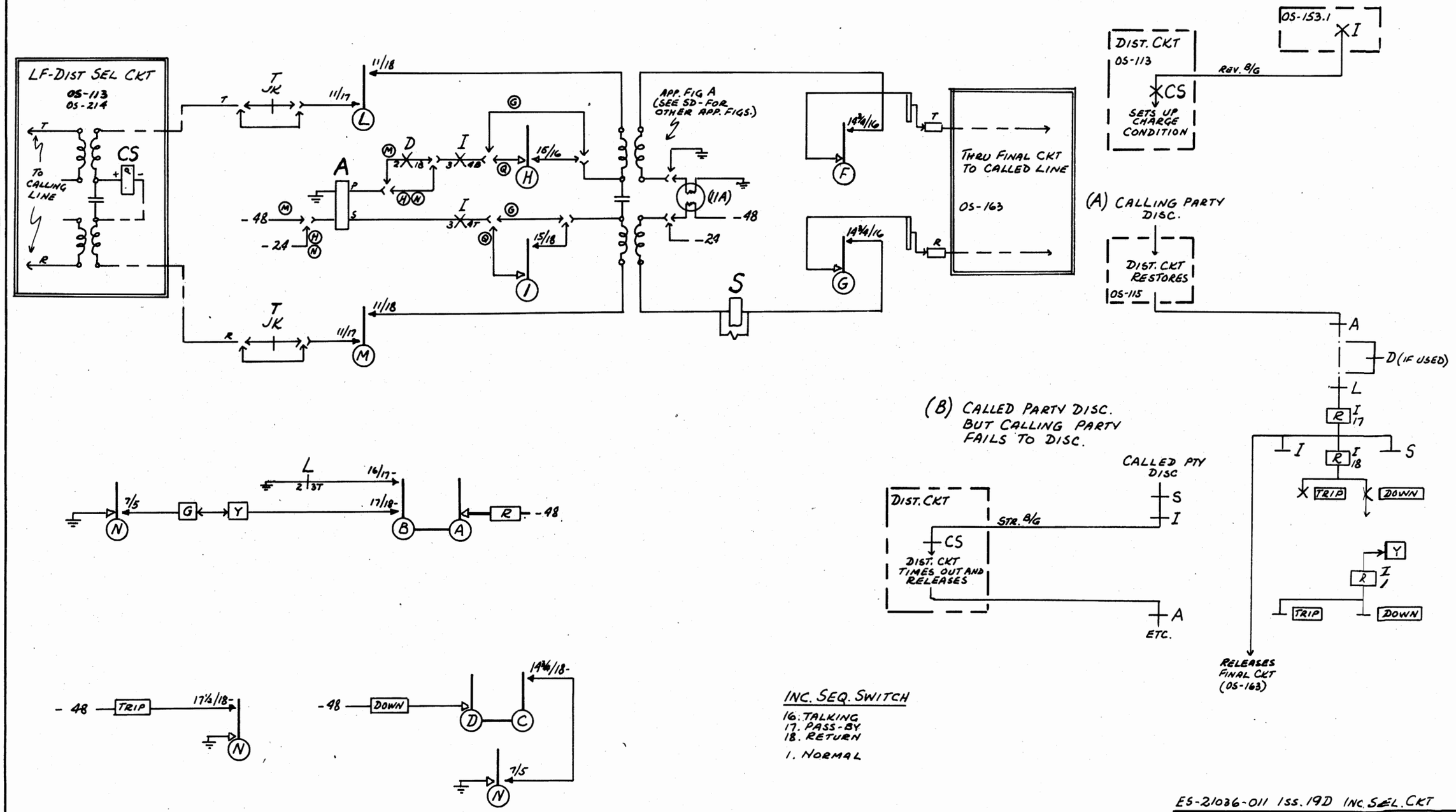

INC. SEQ. SWITCH

16. TALKING
17. PASS-BY
18. RETURN

1. NORMAL

ISSUE	1	
DATE	7-54	
BY	GHH	

ES-21036-011 ISS. 19D INC. SEL. CKT

FM

TALKING DISCONNECT

PANEL GCO

OS-154.1

INC. SEL. CKT.

SEQUENCE CHART

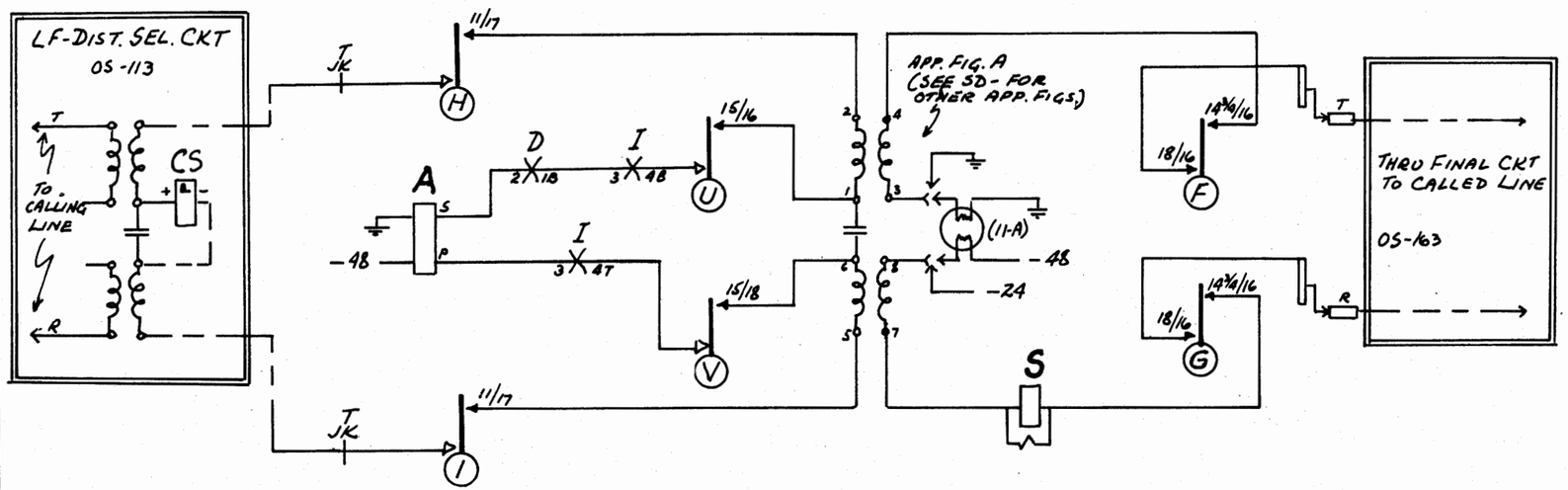

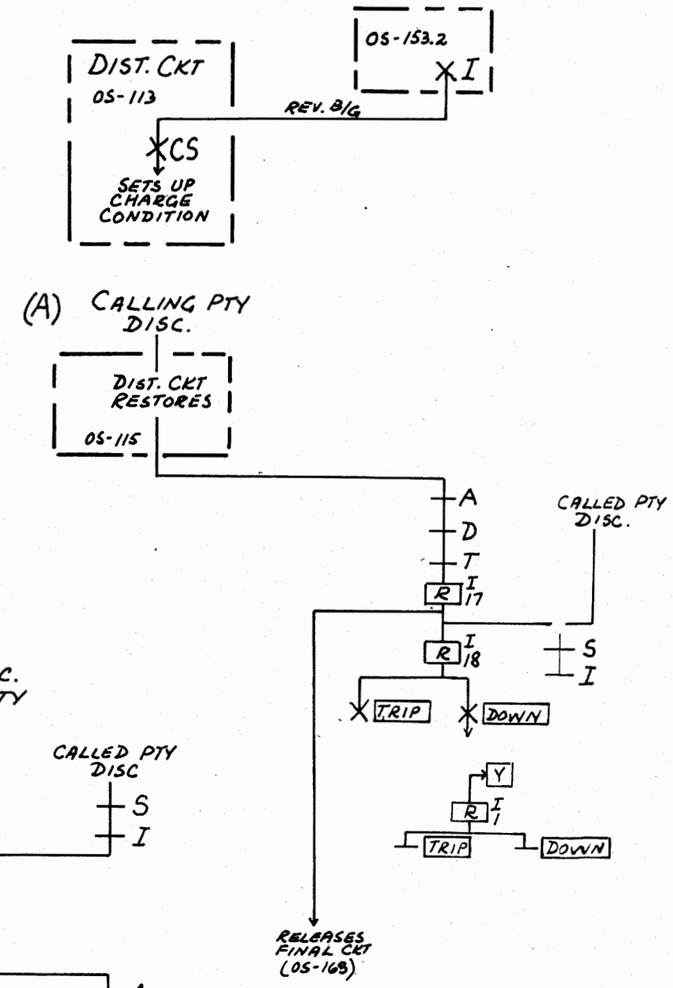

(B) CALLED PTY DISC. BUT CALLING PTY FAILS TO DISC.

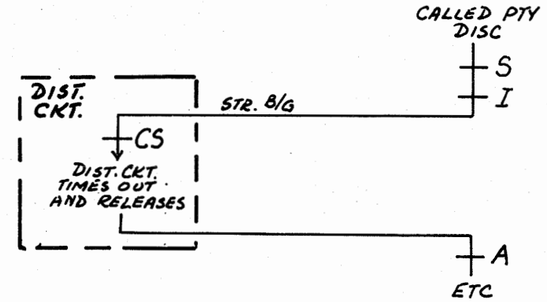

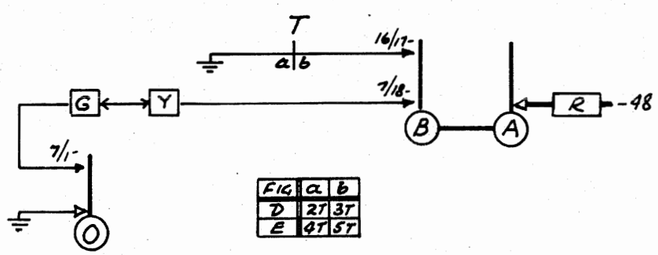

FIG.	a	b
D	2T	3T
E	4T	5T

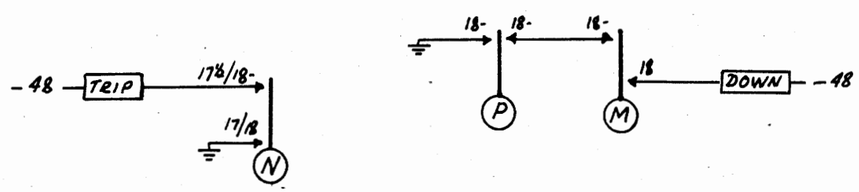

INC. SEQ. SWITCH

16. TALKING
17. OVERFLOW
18. RETURN
1. NORMAL

ISSUE	1
DATE	7-54
BY	GHH

ES-20292-011 ISS. 22-D INC. SEL. CKT

REPT

TALKING DISCONNECT

PANEL GCO

OS-154.2

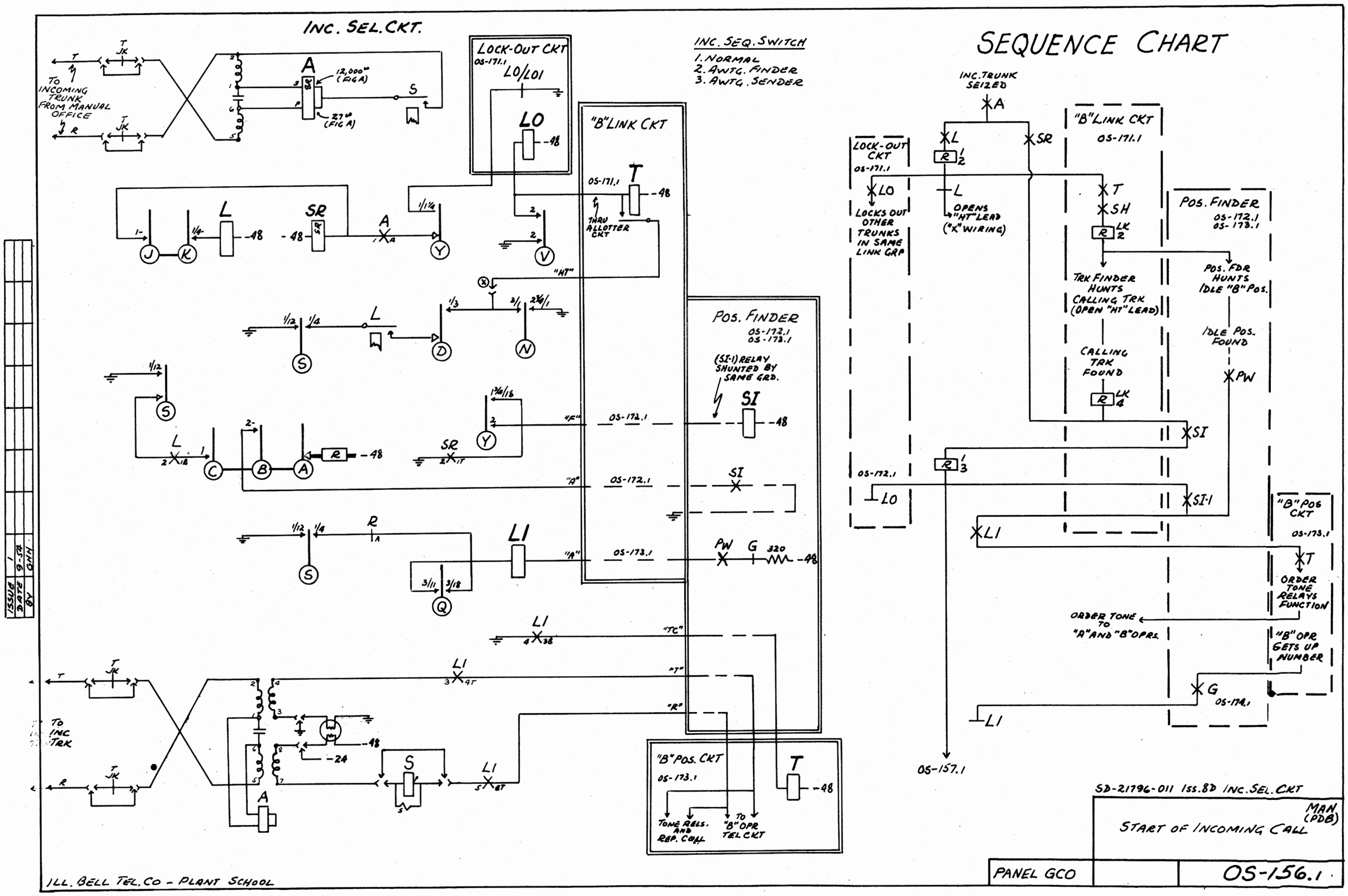
INC. SEL. CKT.
TO INCOMING TRUNK FROM MANUAL OFFICE
12,000Ω (FIG A)
27Ω (FIG A)
LOCK-OUT CKT
OS-171.1
LO/LO1
LO
-48
"B" LINK CKT
OS-171.1
THRU ALLOTTER CKT
"HT"
"F"
"A"
"TC"
"T"
"R"
OS-172.1
OS-173.1
POS. FINDER
OS-172.1
OS-173.1
(SI-1) RELAY SHUNTED BY SAME GRD.
SI
PW
G
320
TO INC TRK
-24
"B" POS. CKT
OS-173.1
TONE RELS. AND REP. COIL
TO "B" OPR TEL CKT
INC. SEQ. SWITCH
1. NORMAL
2. AWTG. FINDER
3. AWTG. SENDER
SEQUENCE CHART
INC. TRUNK SEIZED
LOCK-OUT CKT
OS-171.1
LOCKS OUT OTHER TRUNKS IN SAME LINK GRP
OPENS "HT" LEAD ("X" WIRING)
"B" LINK CKT
OS-171.1
POS. FINDER
OS-172.1
OS-173.1
TRK FINDER HUNTS CALLING TRK (OPEN "HT" LEAD)
POS. FDR HUNTS IDLE "B" POS.
IDLE POS. FOUND
CALLING TRK FOUND
"B" POS CKT
OS-173.1
ORDER TONE RELAYS FUNCTION
ORDER TONE TO "A" AND "B" OPRS.
"B" OPR GETS UP NUMBER
OS-174.1
OS-157.1
SD-21796-011 Iss.8D INC. SEL. CKT
MAN (PDB)
START OF INCOMING CALL
PANEL GCO
OS-156.1
ILL. BELL TEL. CO - PLANT SCHOOL
ISSUE 1
DATE 9-57
BY GHH

SEQUENCE CHART

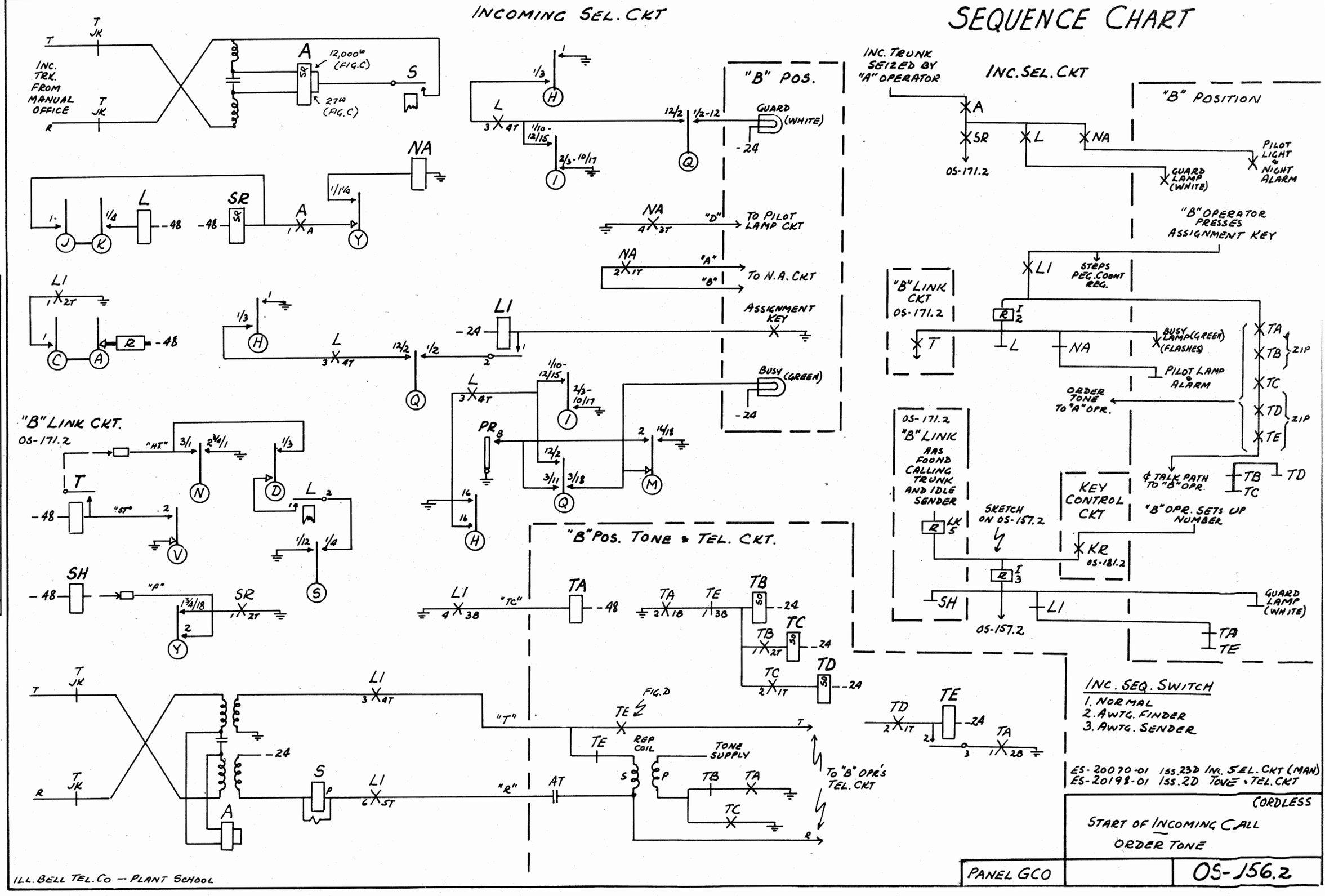

INC. SEL. CKT.

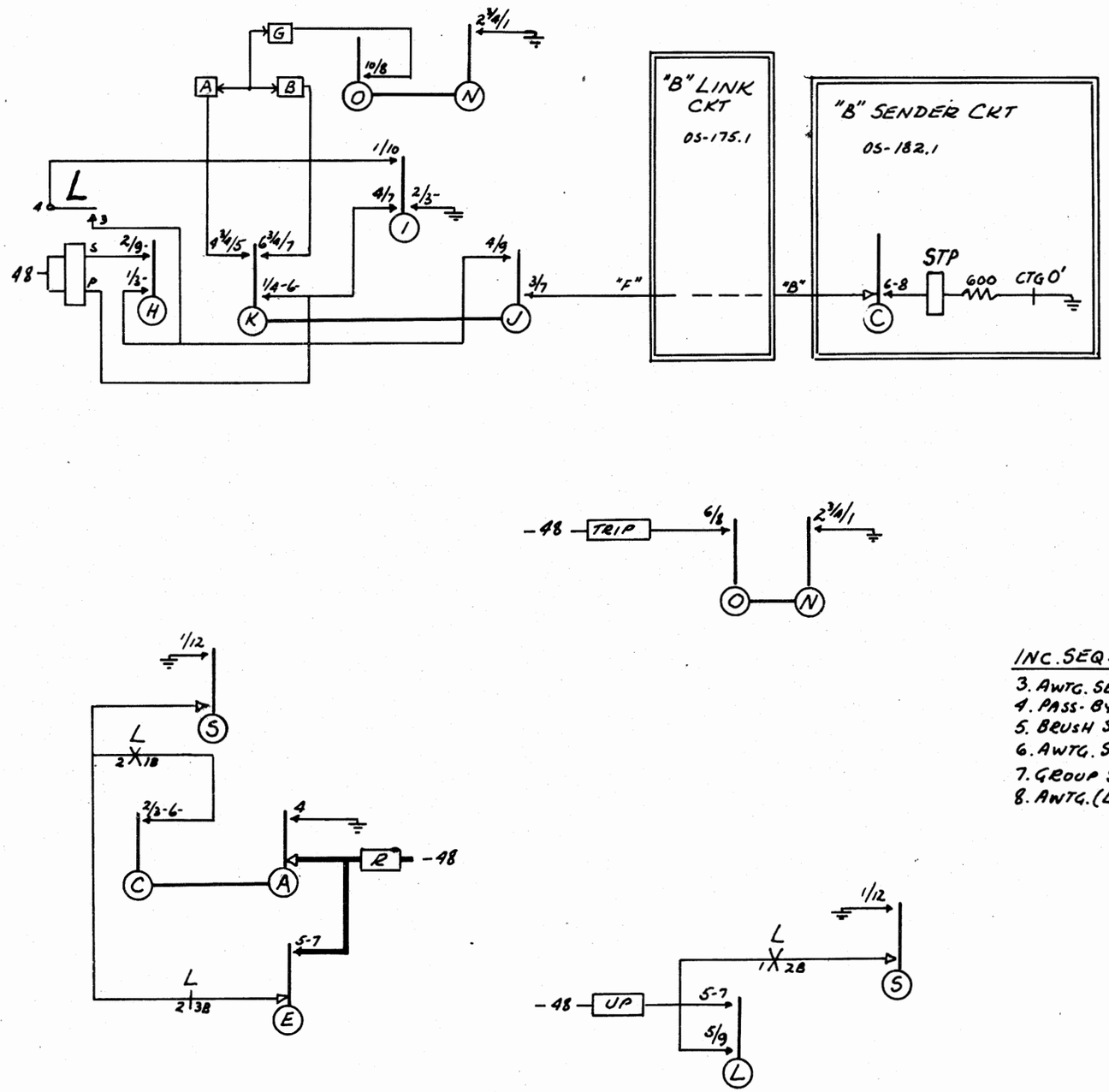

INC. SEQ. SWITCH

3. AWTG. SENDER
4. PASS-BY
5. BRUSH SELECTION
6. AWTG. SENDER (TRIP)
7. GROUP SELECTION
8. AWTG. (L) RELAY

SEQUENCE CHART

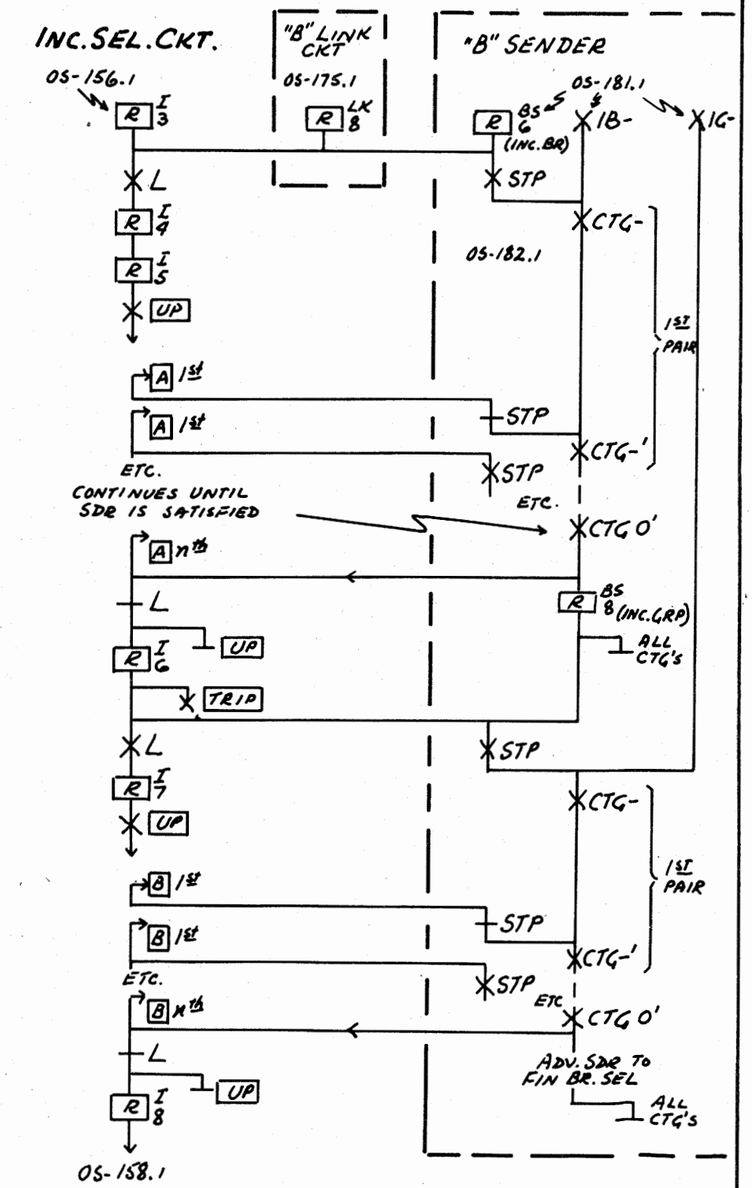

ISSUE	DATE	BY
1	9-54	GHN

SD-21796-011 ISS. 8D INC. SEL. CKT

MAN (PDB)

INCOMING BRUSH AND GROUP SELECTION

PANEL GCO

OS-157.1

ILL. BELL TEL. CO — PLANT SCHOOL

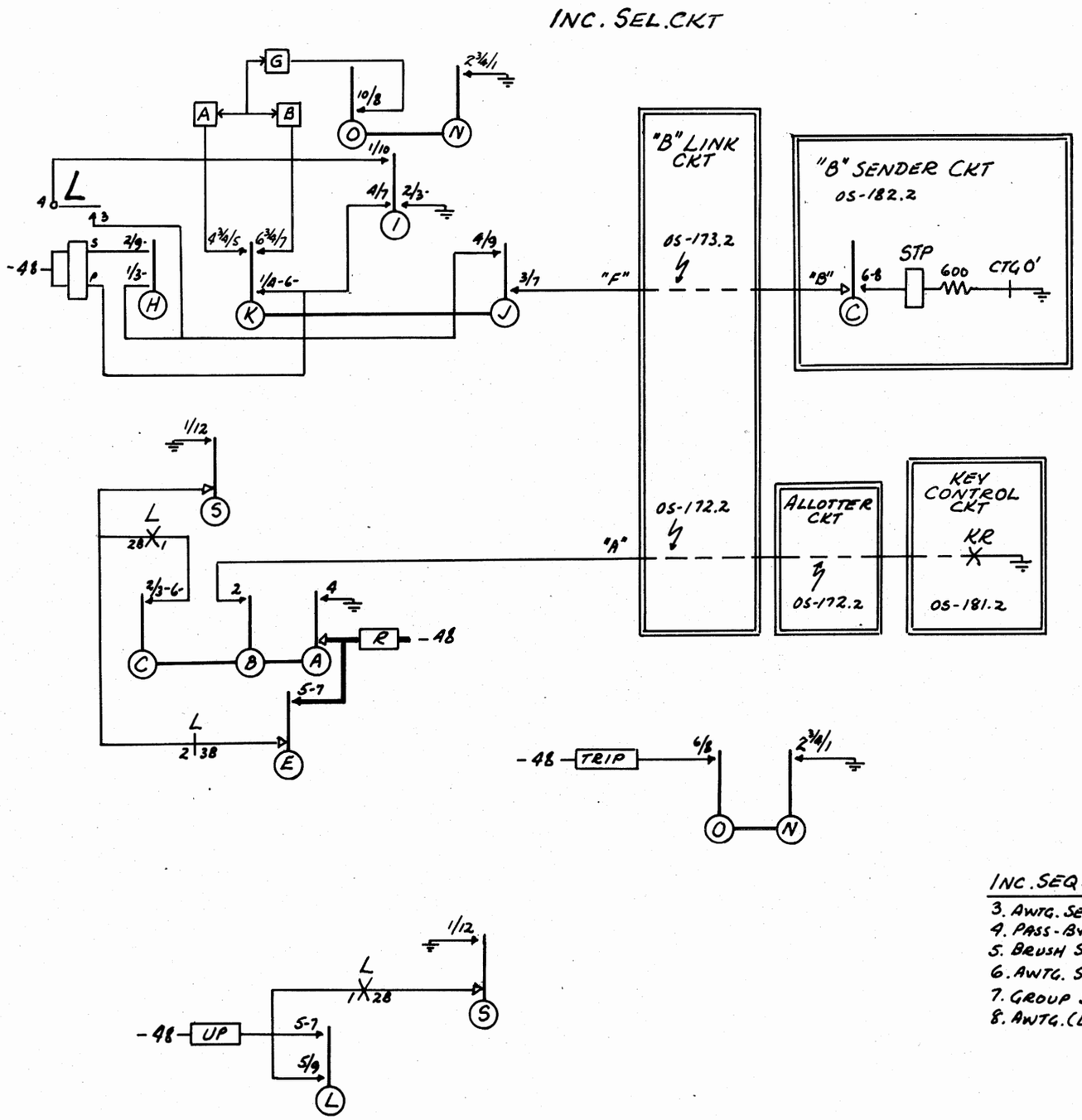

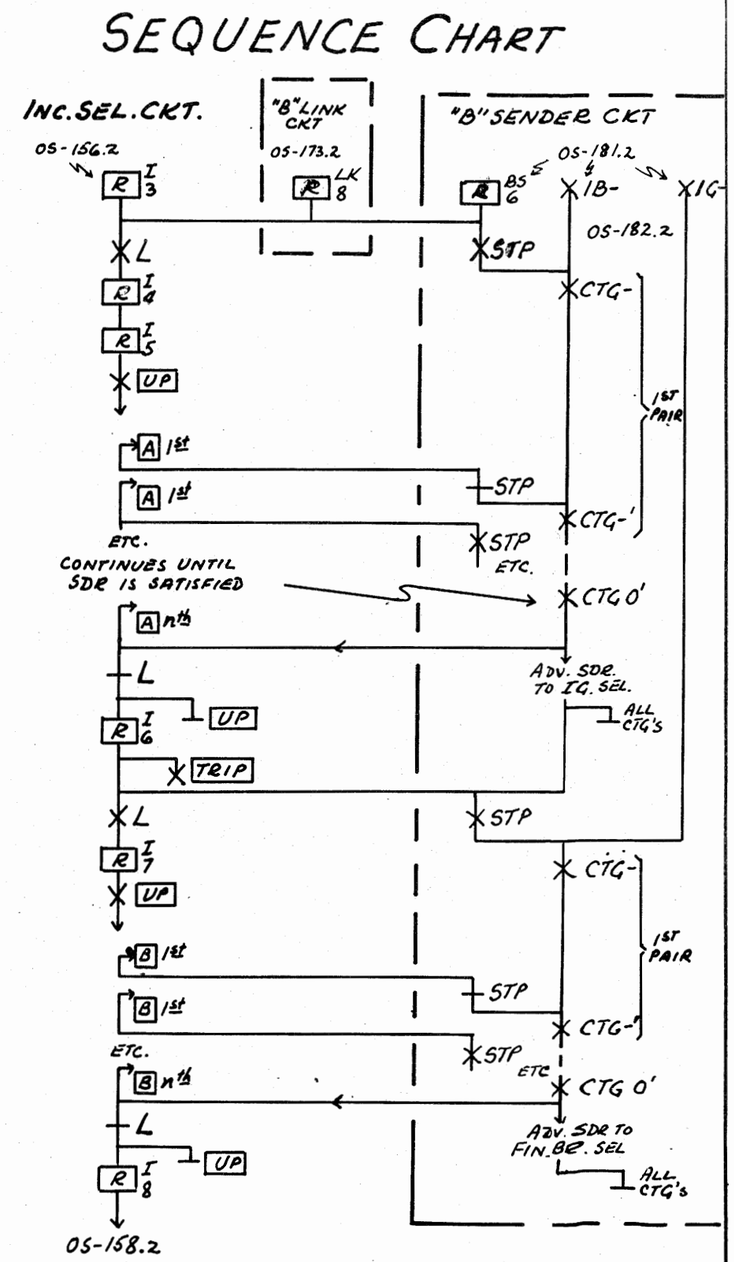

INC. SEQ. SWITCH

3. AWTG. SENDER
4. PASS-BY
5. BRUSH SELECTION
6. AWTG. SENDER (TRIP)
7. GROUP SELECTION
8. AWTG. (L) RELAY

ISSUE	DATE	BY
1	9-54	GH/NS

ES-20070-01 ISS. 23D INC. SEL. CKT (MAN)
CDLS

INCOMING BRUSH AND GROUP SELECTION

PANEL GCO

OS-157.2

ILL. BELL TEL. CO – PLANT SCHOOL

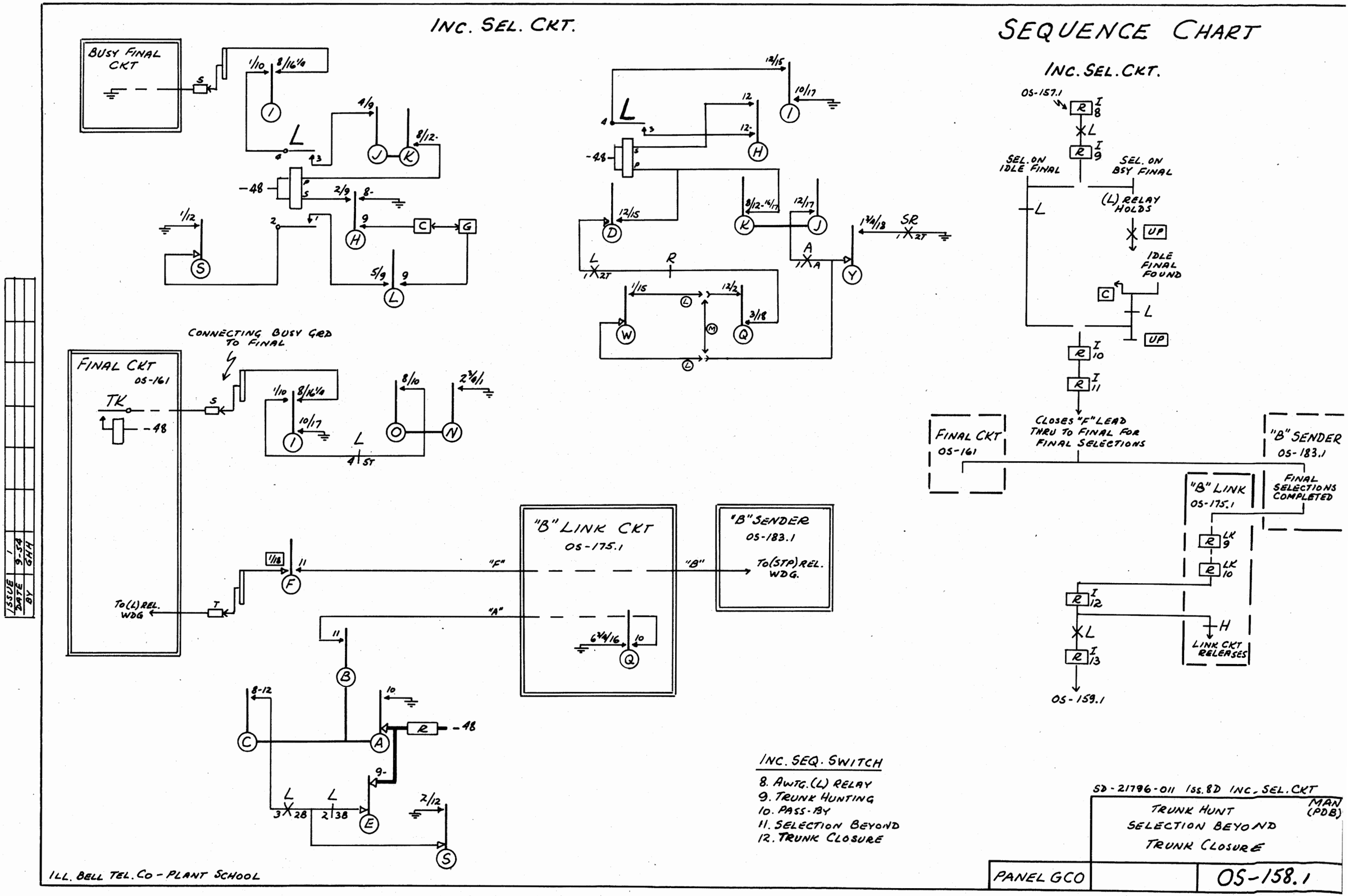
INC. SEL. CKT.
SEQUENCE CHART
BUSY FINAL CKT
FINAL CKT 05-161
TK
-48
CONNECTING BUSY GRD TO FINAL
"B" LINK CKT 05-175.1
"B" SENDER 05-183.1
TO(STP) REL. WDG.
TO(L) REL. WDG
"F"
"B"
"A"
INC. SEQ. SWITCH
8. AWTG. (L) RELAY
9. TRUNK HUNTING
10. PASS-BY
11. SELECTION BEYOND
12. TRUNK CLOSURE
INC. SEL. CKT.
05-157.1
SEL. ON IDLE FINAL
SEL. ON BSY FINAL
(L) RELAY HOLDS
IDLE FINAL FOUND
CLOSES "F" LEAD THRU TO FINAL FOR FINAL SELECTIONS
FINAL CKT 05-161
"B" SENDER 05-183.1
"B" LINK 05-175.1
FINAL SELECTIONS COMPLETED
LINK CKT RELEASES
05-159.1
ISSUE 1
DATE 9-54
BY GHH
SD-21796-011 Iss. 8D INC. SEL. CKT
TRUNK HUNT
SELECTION BEYOND
TRUNK CLOSURE
MAN (PDB)
PANEL GCO
OS-158.1
ILL. BELL TEL. CO - PLANT SCHOOL

INC. SEL. CKT.

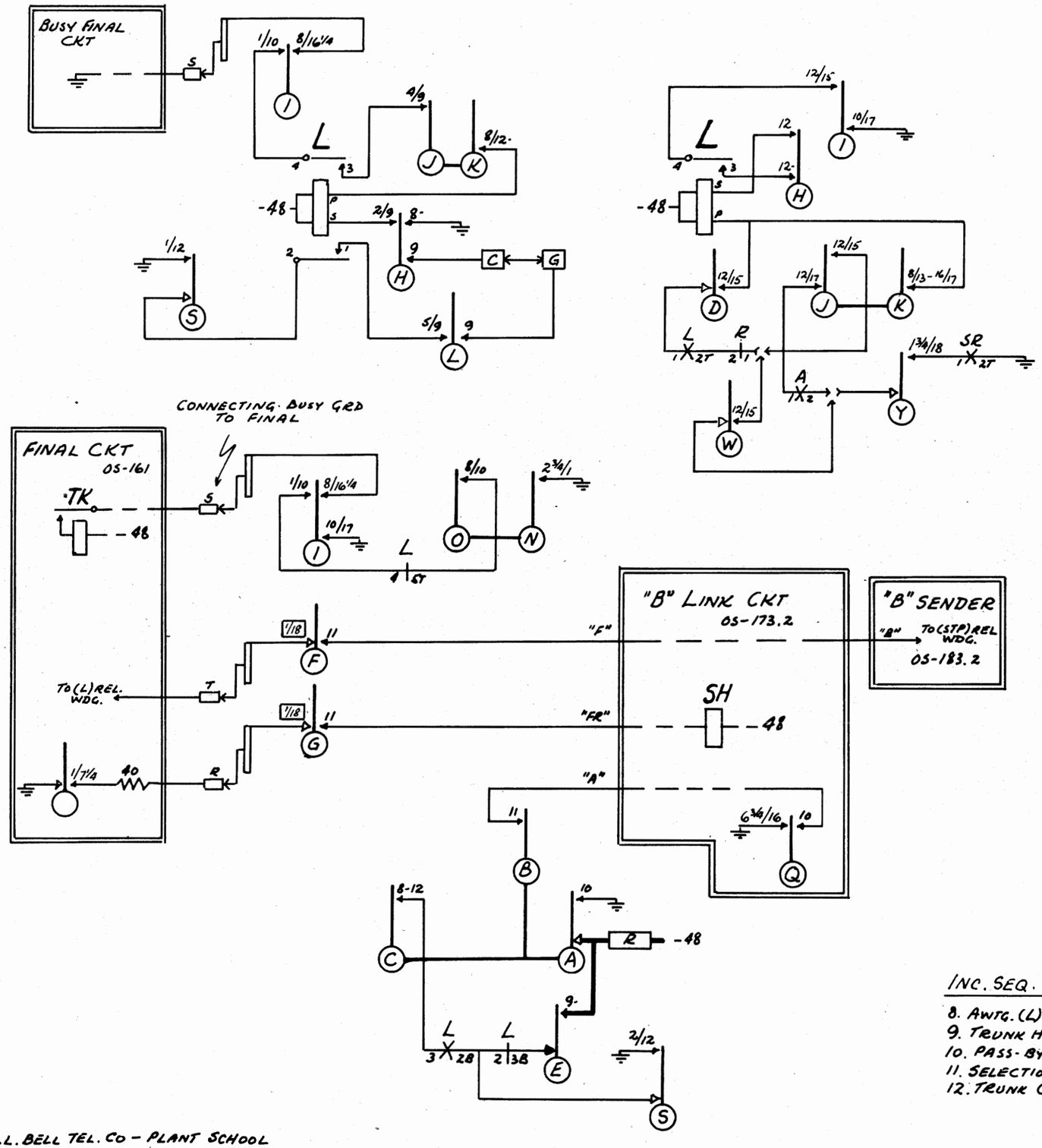

ISSUE	1
DATE	9-54
BY	GH/NS

SEQUENCE CHART

INC. SEL. CKT.

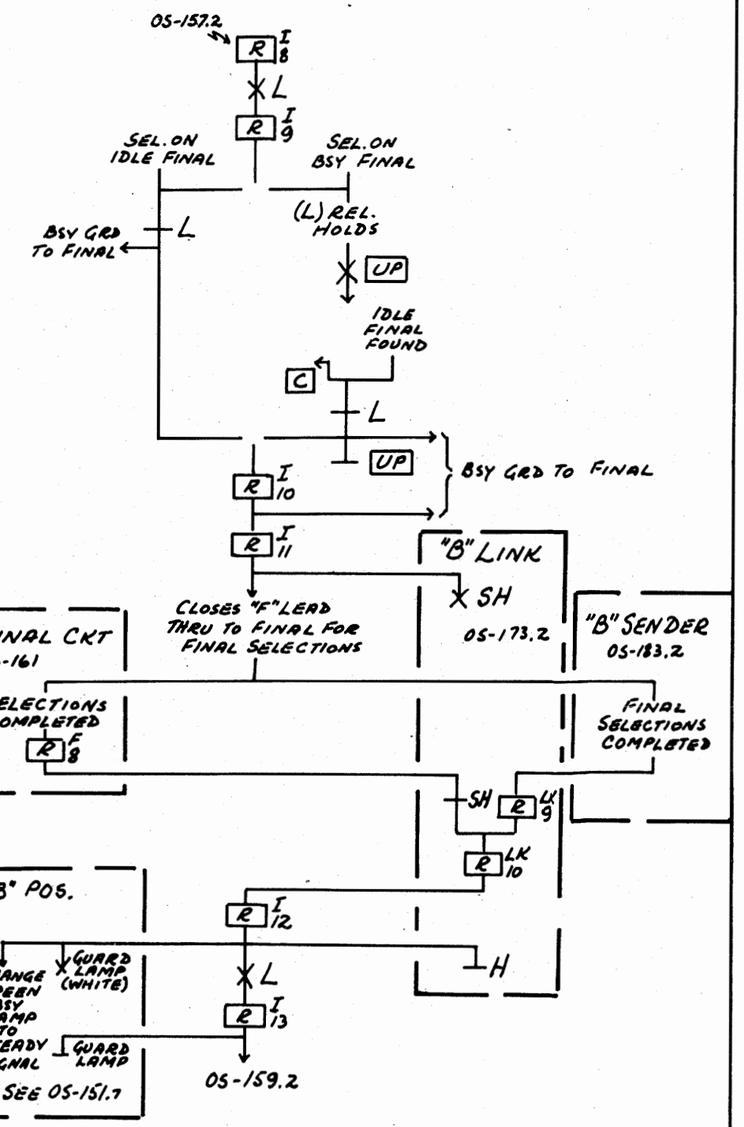

INC. SEQ. SWITCH

8. AWTG. (L) RELAY
9. TRUNK HUNTING
10. PASS-BY
11. SELECTION BEYOND
12. TRUNK CLOSURE

ES-20070-01 ISS. 23D INC. SEL. CKT (MAN)

TRUNK HUNT
SELECTION BEYOND
TRUNK CLOSURE

CDLS

PANEL GCO

OS-158.2

INC. SEL. CKT.

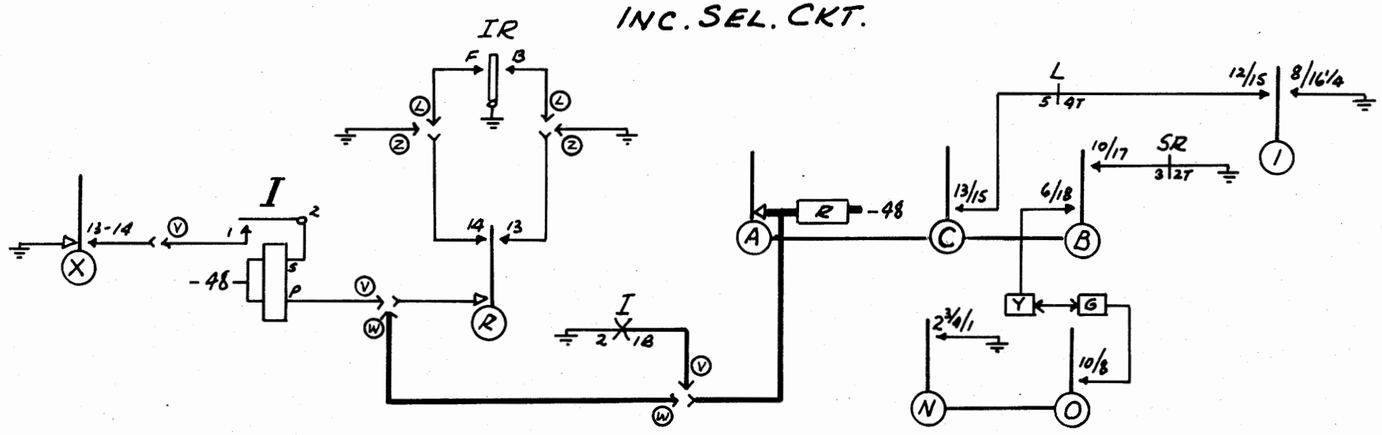

(V) (L) WITH IMMEDIATE RING
(V) (Z) WITHOUT IMMEDIATE RING (I-RELAY FURNISHED)
(W) " " " (I-RELAY NOT FURNISHED)

SEQUENCE CHART

INC. SEL. CKT.

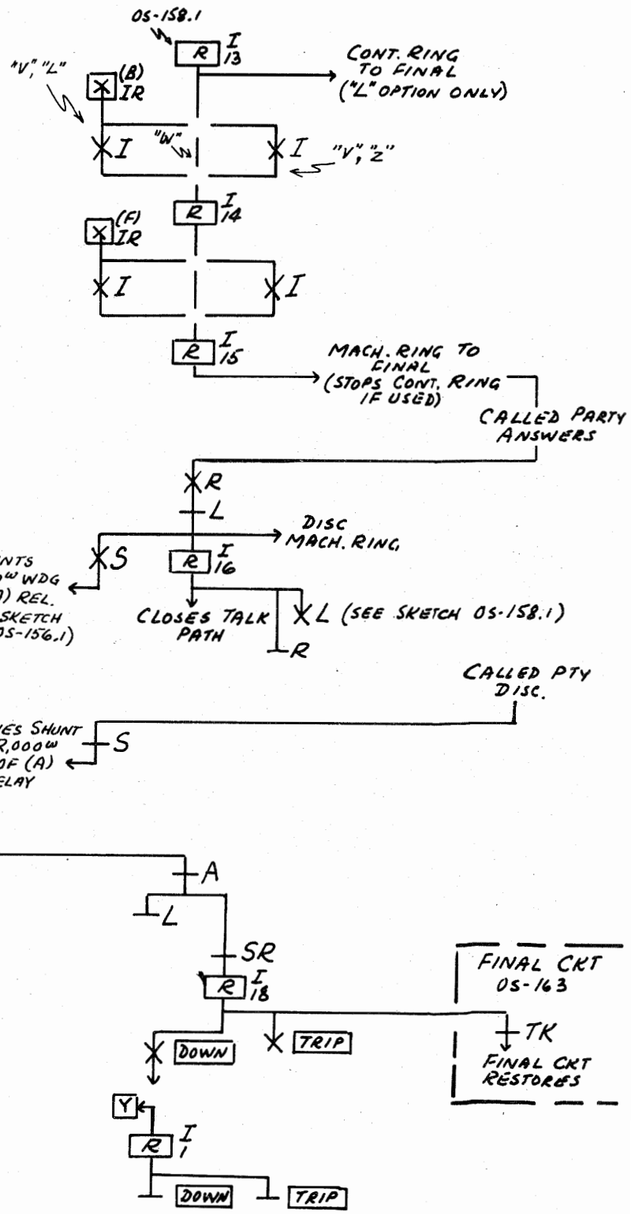

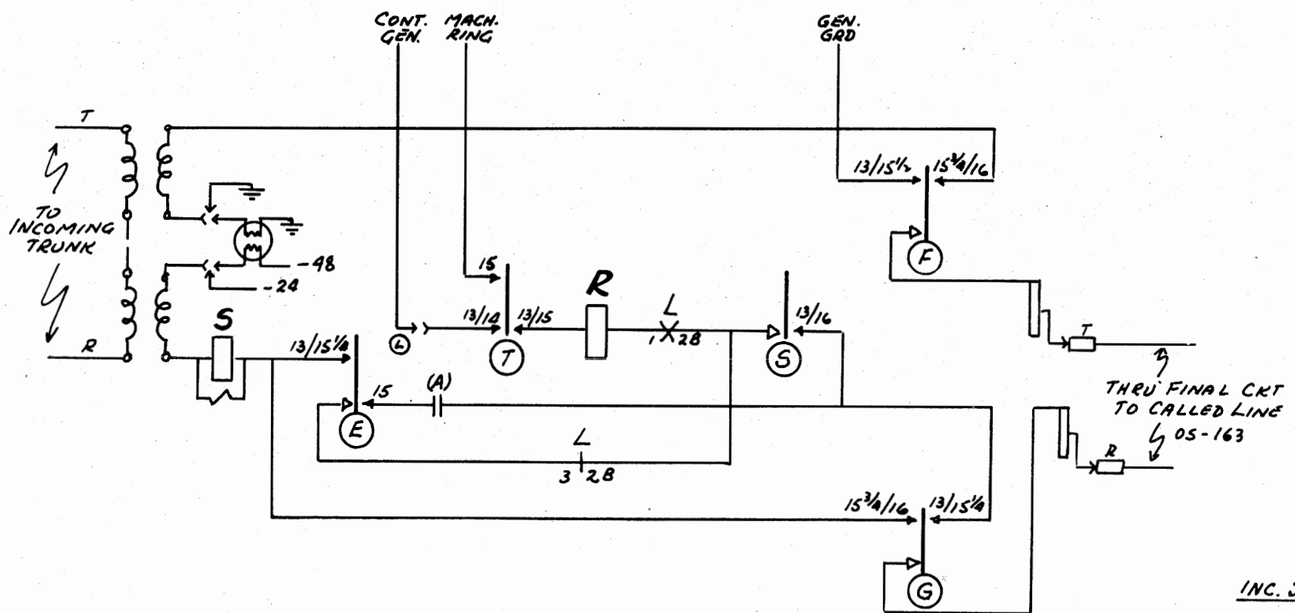

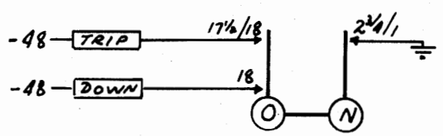

INC. SEQ. SWITCH

13. IMMEDIATE RING (AWTG. INT. "B")
14. " " (" " "F")
15. RINGING WITH INTERVALS
16. TALKING
17. OVERFLOW
18. RETURN

1. NORMAL

ISSUE	DATE	BY
1	9-54	GHH

SD-21796-011 ISS. 8D INC. SEL. CKT

RINGING AND TRIPPING
TALKING
DISCONNECT

MAN (PDB)

PANEL GCO

OS-159.1

ILL. BELL TEL. CO – PLANT SCHOOL

SEQUENCE CHART

INC. SEL. CKT.

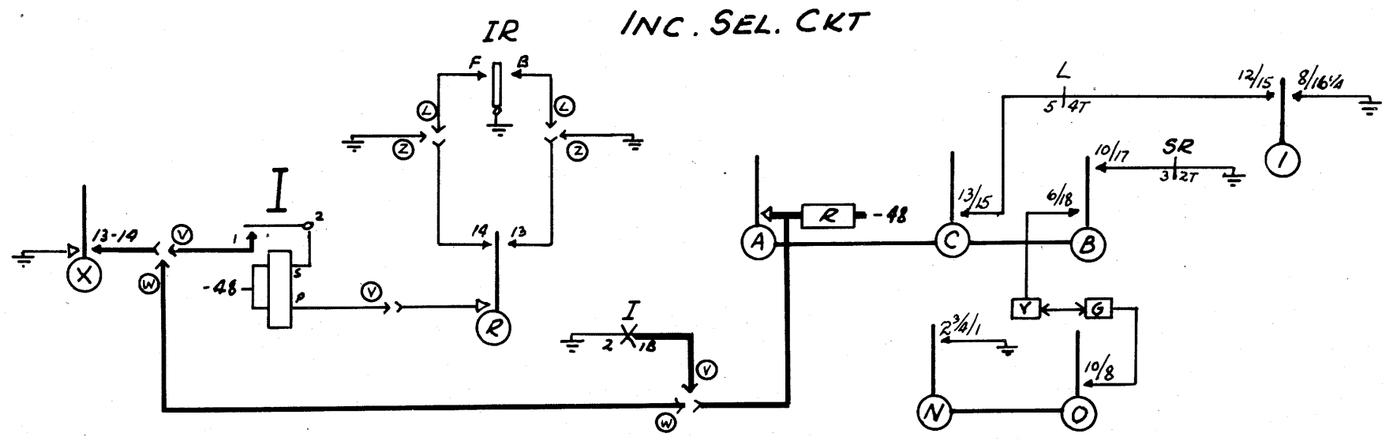

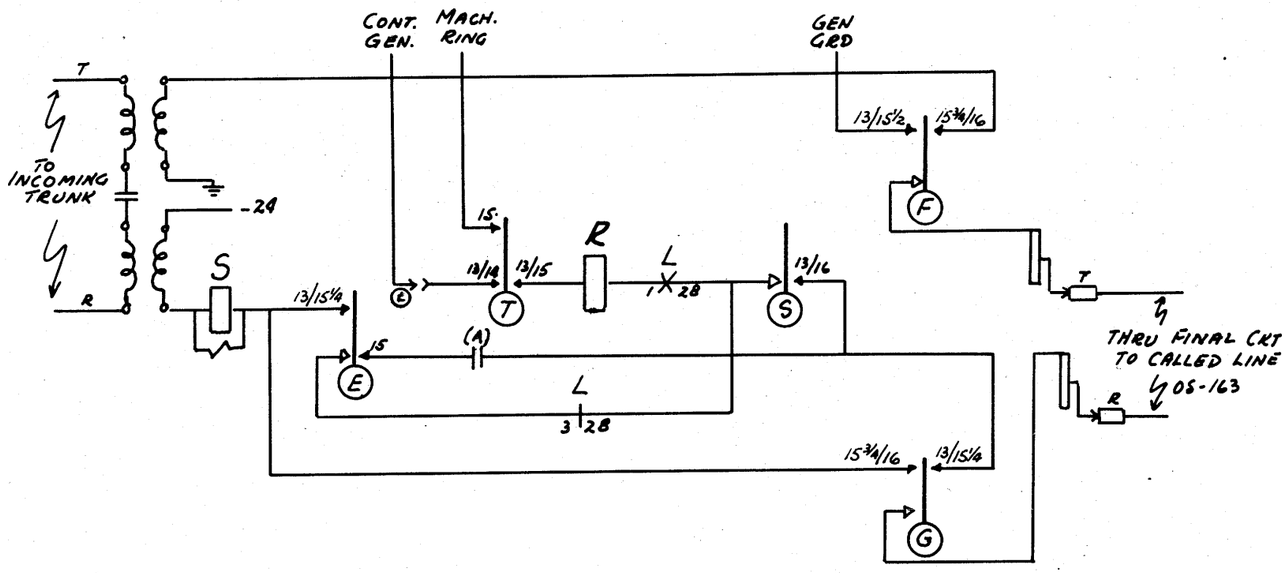

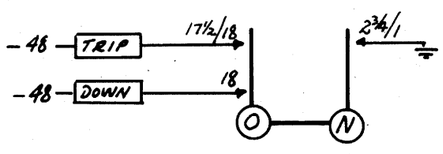

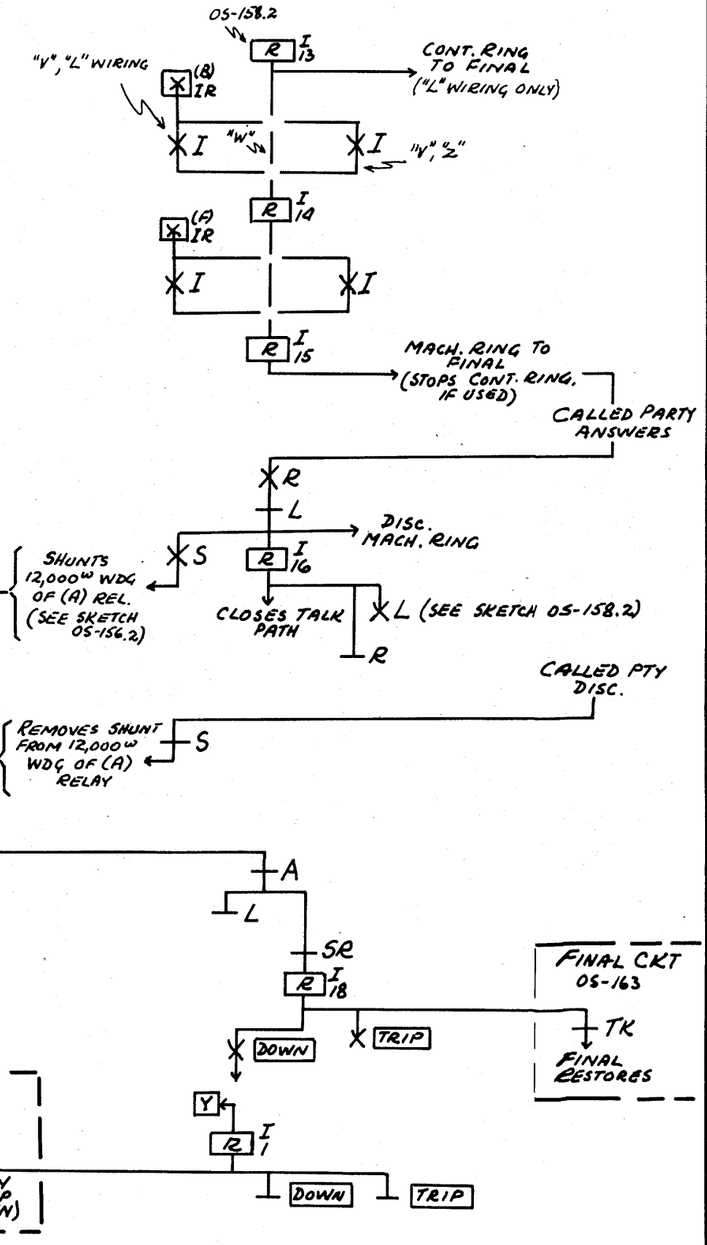

INC. SEQ. SWITCH

13. IMMEDIATE RING (AWTG. INT "B")
14. " " (" " "F")
15. RINGING WITH INTERVALS
16. TALKING
17. OVERFLOW
18. RETURN
1. NORMAL

ISSUE	1	
DATE	9-54	
BY	GH/NS	

ES-20070-01 ISS. 23D INC. SEL. CKT (MAN)

CDLS

RINGING AND TRIPPING
TALKING
DISCONNECT

PANEL GCO

OS-159.2

ILL. BELL TEL. CO – PLANT SCHOOL

FINAL CKT

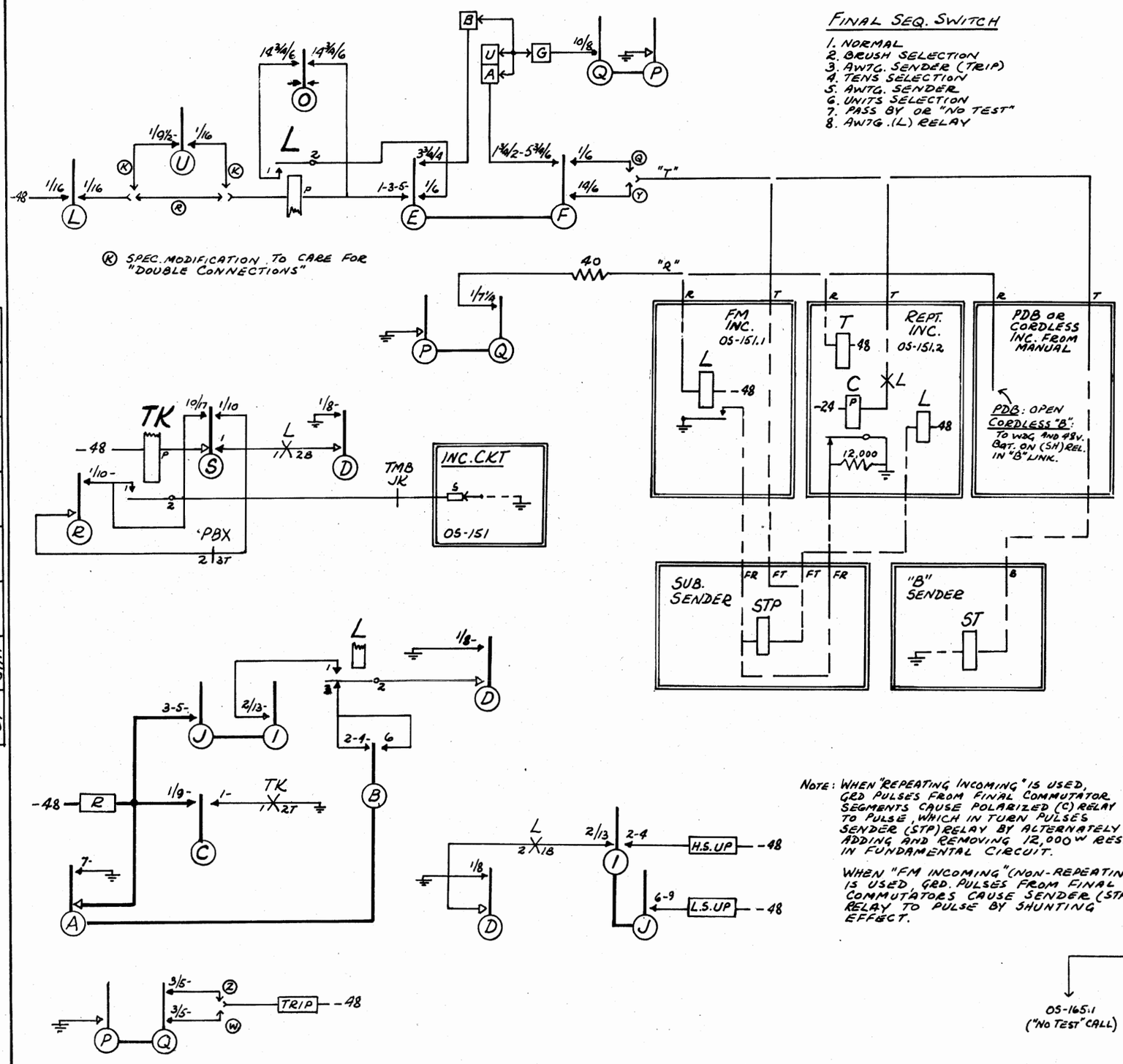

SEQUENCE CHART

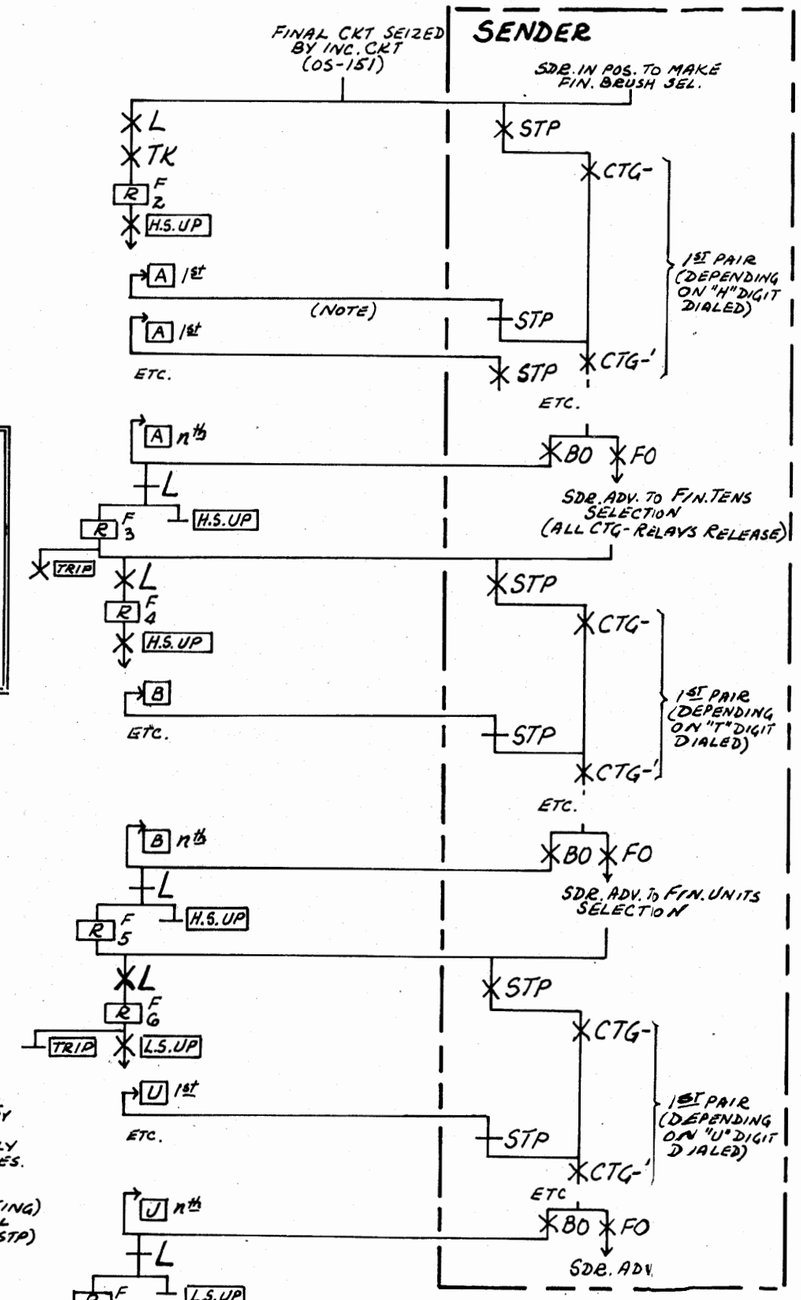

ES-239664-011 ISS. 4OD FINAL SEL. CKT

BRUSH SELECTION
TENS-SELECTION
UNITS SELECTION

PANEL GCO

05-161.1

ISSUE	DATE	BY
1	8-54	GHH

ILL. BELL TEL. CO - PLANT SCHOOL

FINAL SEL. CKT

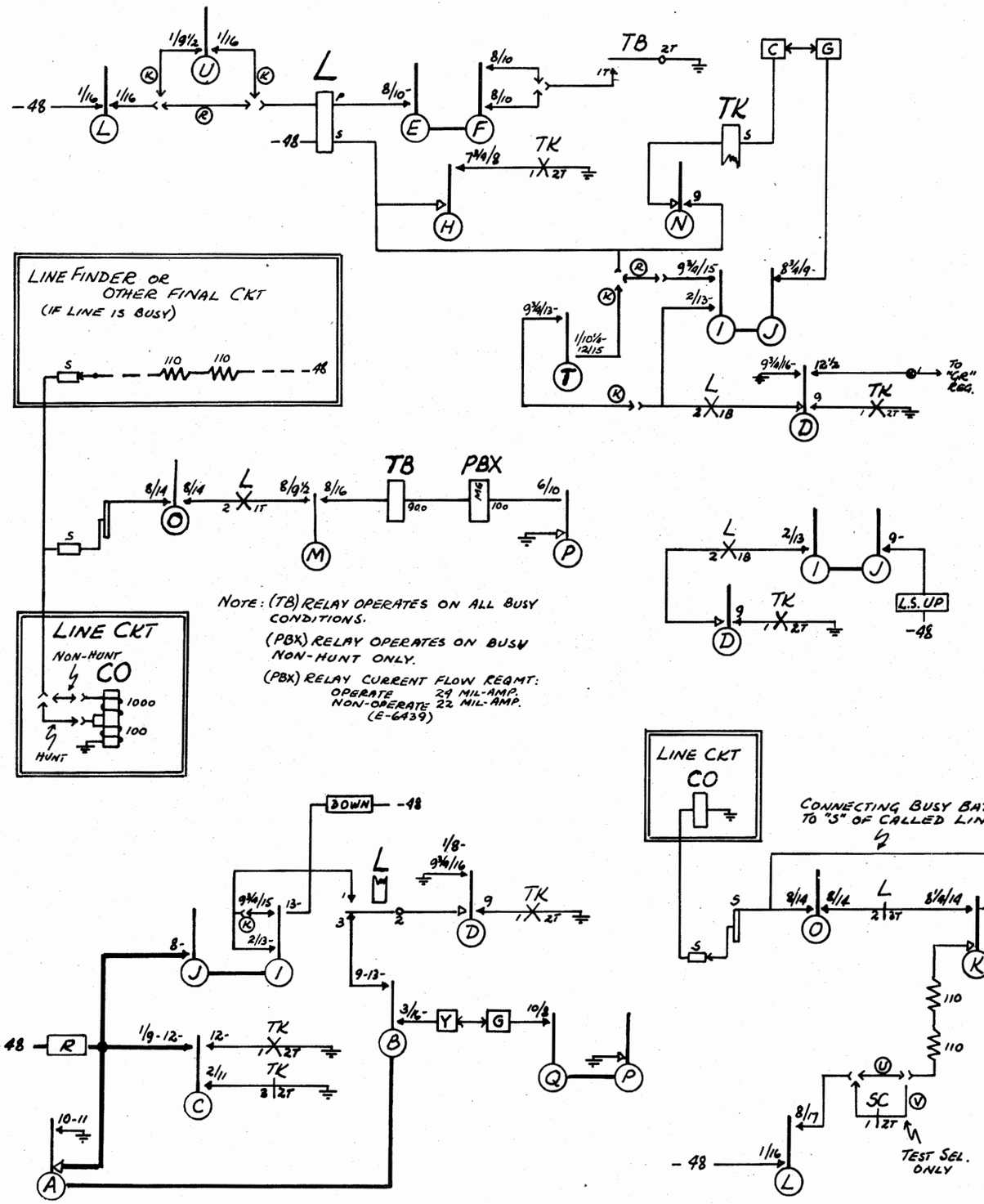

NOTE: (TB) RELAY OPERATES ON ALL BUSY CONDITIONS.

(PBX) RELAY OPERATES ON BUSY NON-HUNT ONLY.

(PBX) RELAY CURRENT FLOW REQMT:
OPERATE 24 MIL-AMP.
NON-OPERATE 22 MIL-AMP.
(E-6439)

SEQUENCE CHART

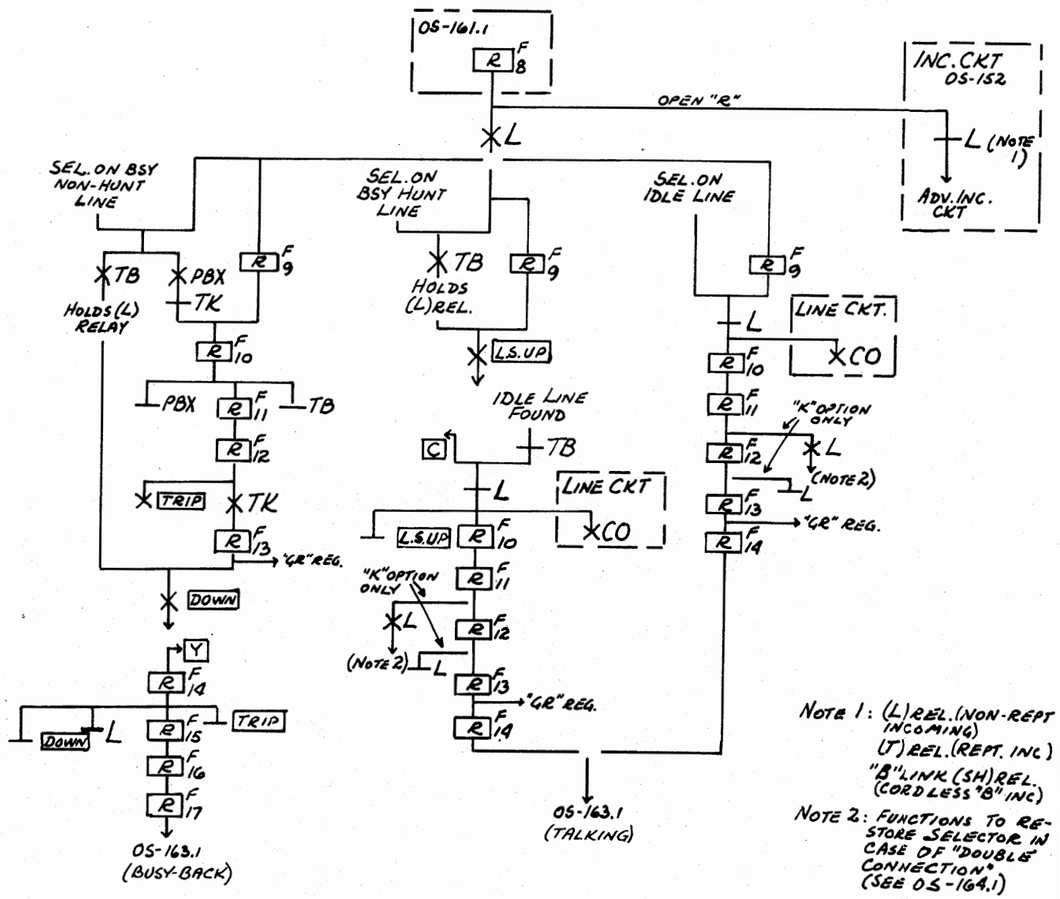

NOTE 1: (L) REL. (NON-REPT INCOMING)
(J) REL. (REPT. INC.)
"B" LINK (SH) REL. (CORDLESS "B" INC.)

NOTE 2: FUNCTIONS TO RESTORE SELECTOR IN CASE OF "DOUBLE CONNECTION" (SEE OS-164.1)

FINAL SEQ. SWITCH

8. AWTG. (L) RELAY
9. TESTING. (PBX HUNT)
10. PASS-BY
11. PASS-BY
12. AWTG. (TK) RELAY
13. RETURN ON BUSY AND PREMATURE RELEASE
14. TALKING
15. AWTG. "F" INT. OR SUB. RLS
16. " "B" " " " "
17. BUSY BACK

ES-239664-011 Iss. 40D FINAL SEL. CKT

LINE TESTING
TRUNK HUNT
RESTORE ON BUSY

PANEL GCO

OS-162.1

ISSUE	DATE	BY
1	8-54	GHH

FINAL SEL. CKT.

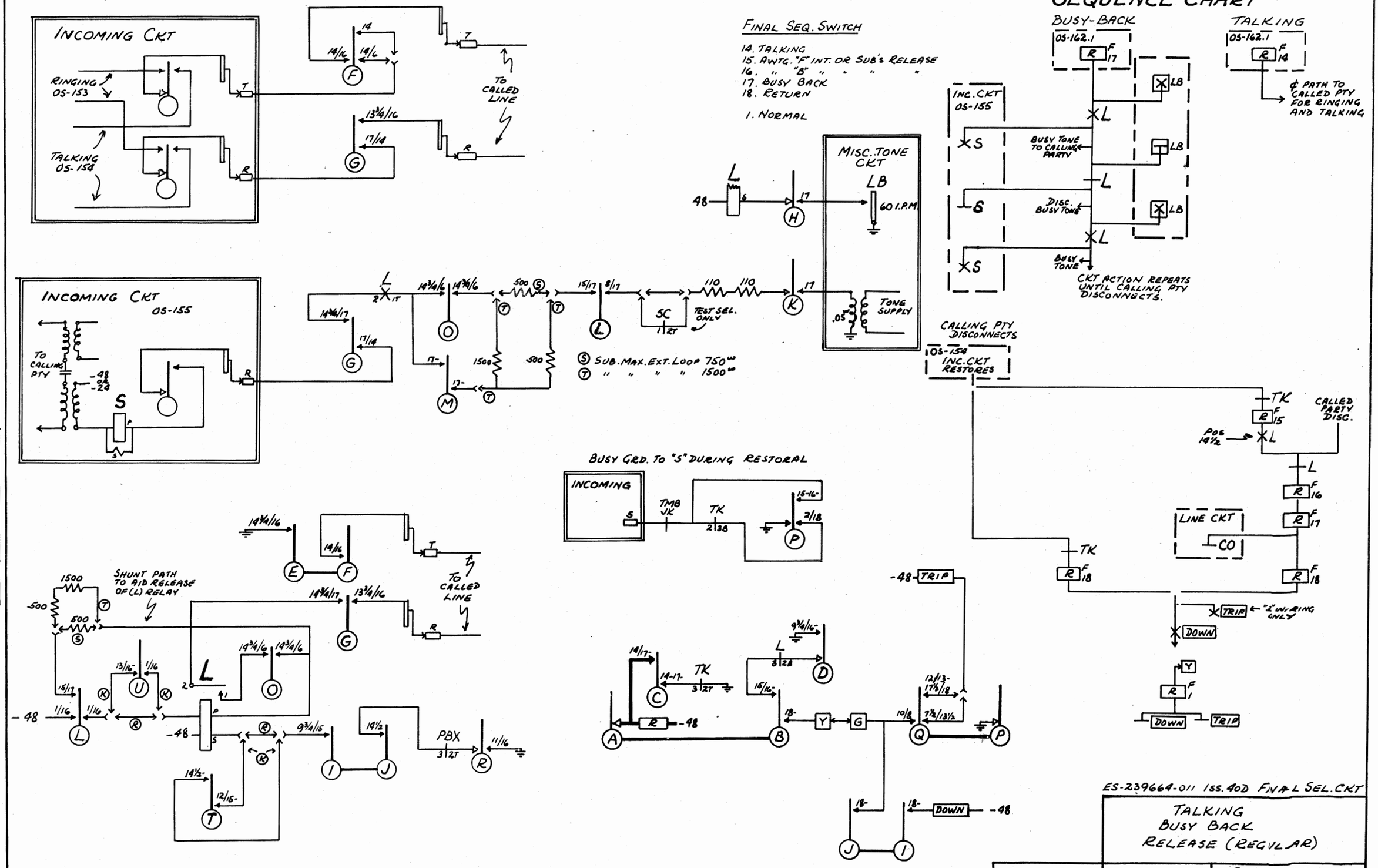

ISSUE	DATE	BY
1	8-54	GHH

ES-239664-011 ISS. 40D FINAL SEL. CKT

TALKING
BUSY BACK
RELEASE (REGULAR)

PANEL GCO

OS-163.1

ILL. BELL TEL. CO - PLANT SCHOOL

FINAL SEL. CKT.

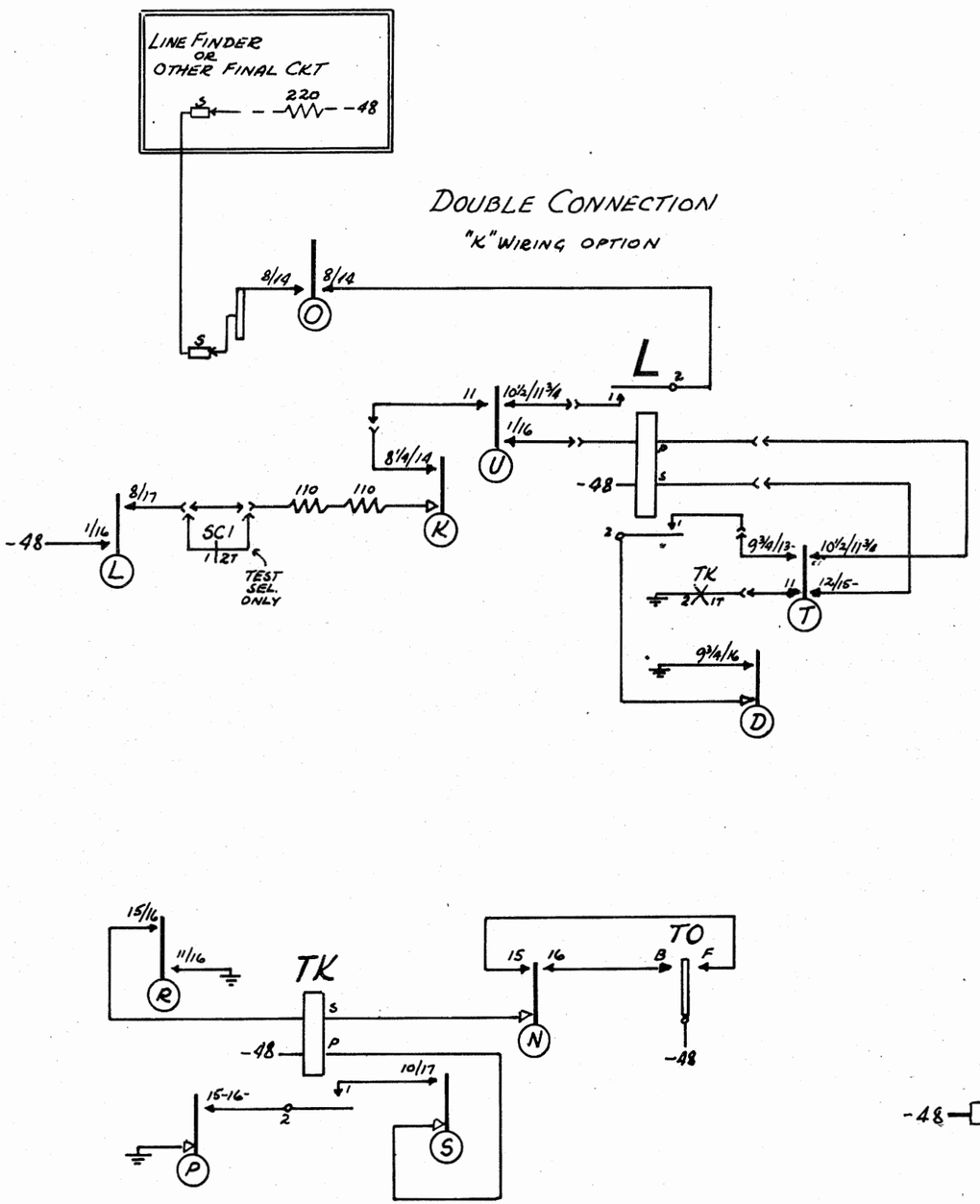

SEQUENCE CHART

DOUBLE CONNECTION

("K" WIRING MODIFICATION FURNISHED)

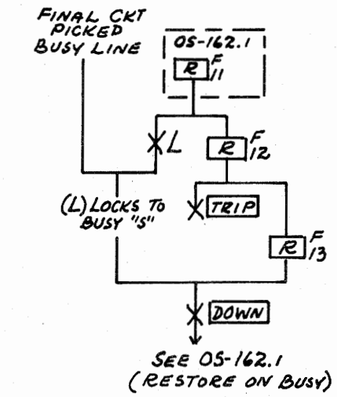

TIME MEASURE RELEASE

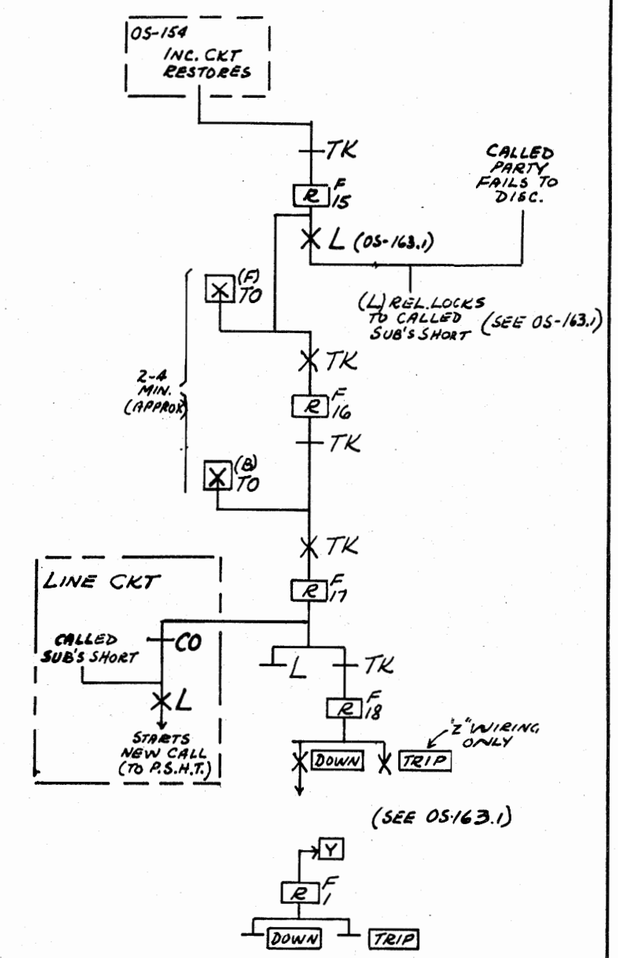

FINAL SEQ. SWITCH

11. PASS-BY
12. AWTG. (TK) RELAY
13. RETURN ON BUSY
14. TALKING
15. AWTG. "F" INT. OR SUB'S RELEASE
16. " "B" " " " "
17. BUSY BACK
18. RETURN

1. NORMAL

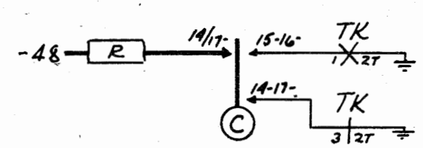

ES-239664-011 ISS. 40D FINAL SEL. CKT

MISC. FEATURES:
(1) DOUBLE CONNECTION ("K" WIRING)
(2) TIME MEASURE RELEASE

ISSUE	1
DATE	9-54
BY	GHH

PANEL GCO | OS-164.1

ILL. BELL TEL. CO. – PLANT SCHOOL

SEQUENCE CHART

FINAL SEL. CKT

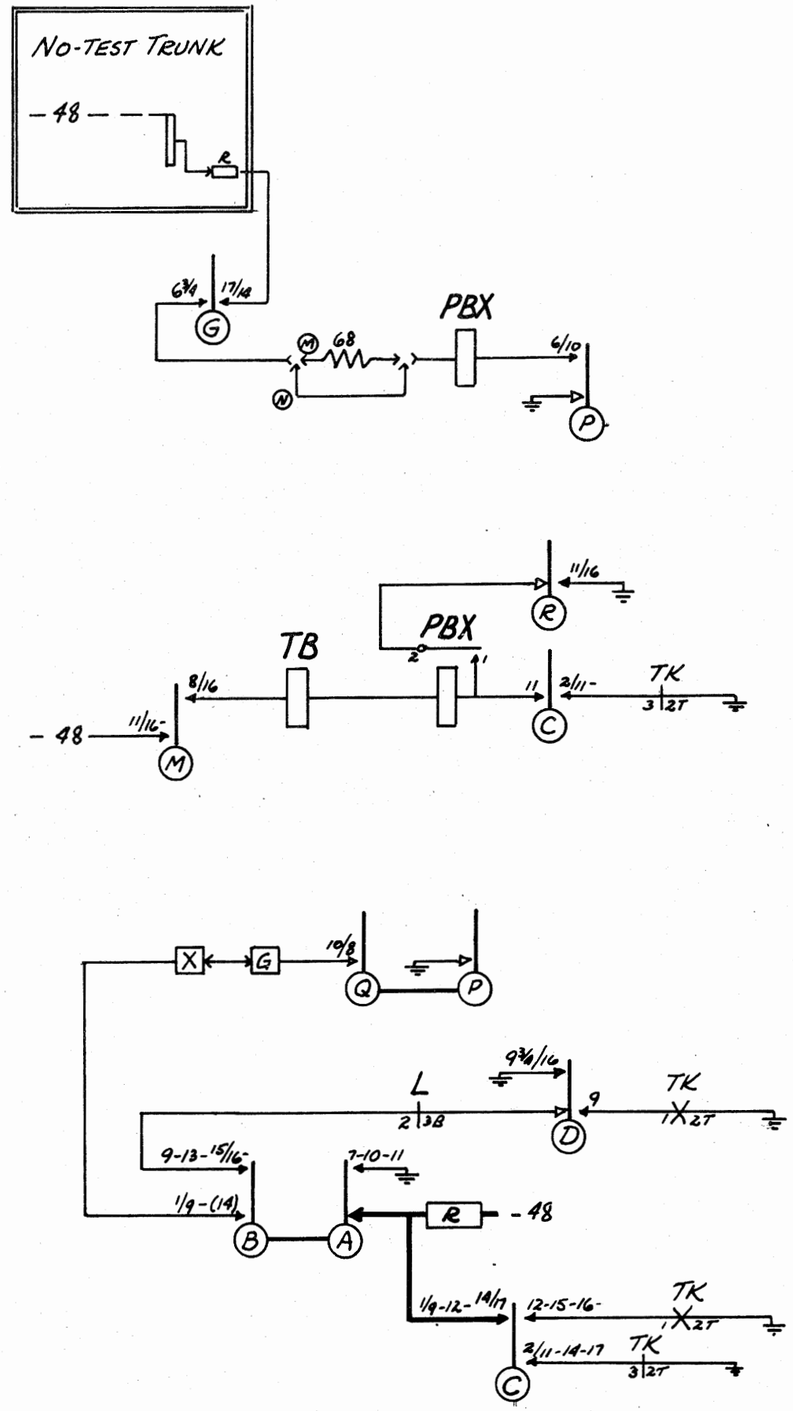

TELL-TALE

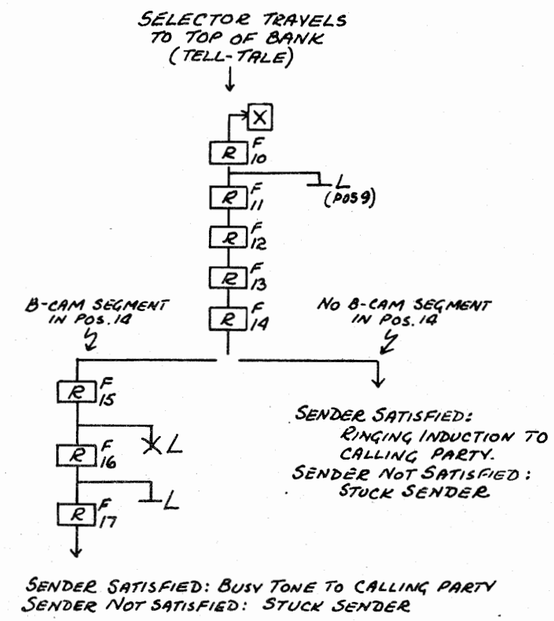

NO-TEST

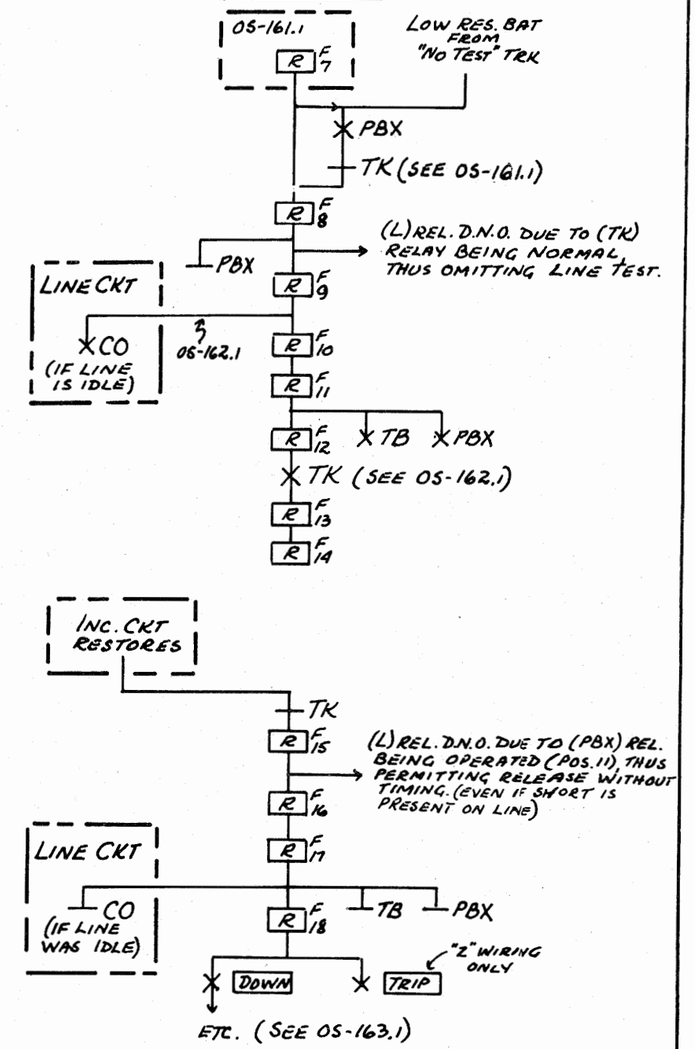

FINAL SEQ. SWITCH

1. NORMAL
2. BRUSH SELECTION
3. AWTG. SENDER
4. TENS SELECTION
5. AWTG. SENDER
6. UNITS SELECTION
7. NO TEST OR PASS-BY
8. AWTG. (L) RELAY
9. TESTING (PBX HUNT)
10. PASS-BY
11. PASS-BY (OPERATE PBX RELAY)
12. AWTG. (TK) RELAY
13. RETURN ON BUSY OR PREMATURE RELEASE
14. TALKING
15. AWTG. "F" INT. OR SUB'S RELEASE
16. " "8" " " " "
17. BUSY BACK
18. RETURN

ISSUE	DATE	BY
1	9-54	GHH

ES-239664-011 ISS. 40D FINAL SEL. CKT

MISC. FEATURES:
(1) TELL-TALE
(2) NO-TEST

PANEL GCO

OS-165.1

"B" LINK CKT.

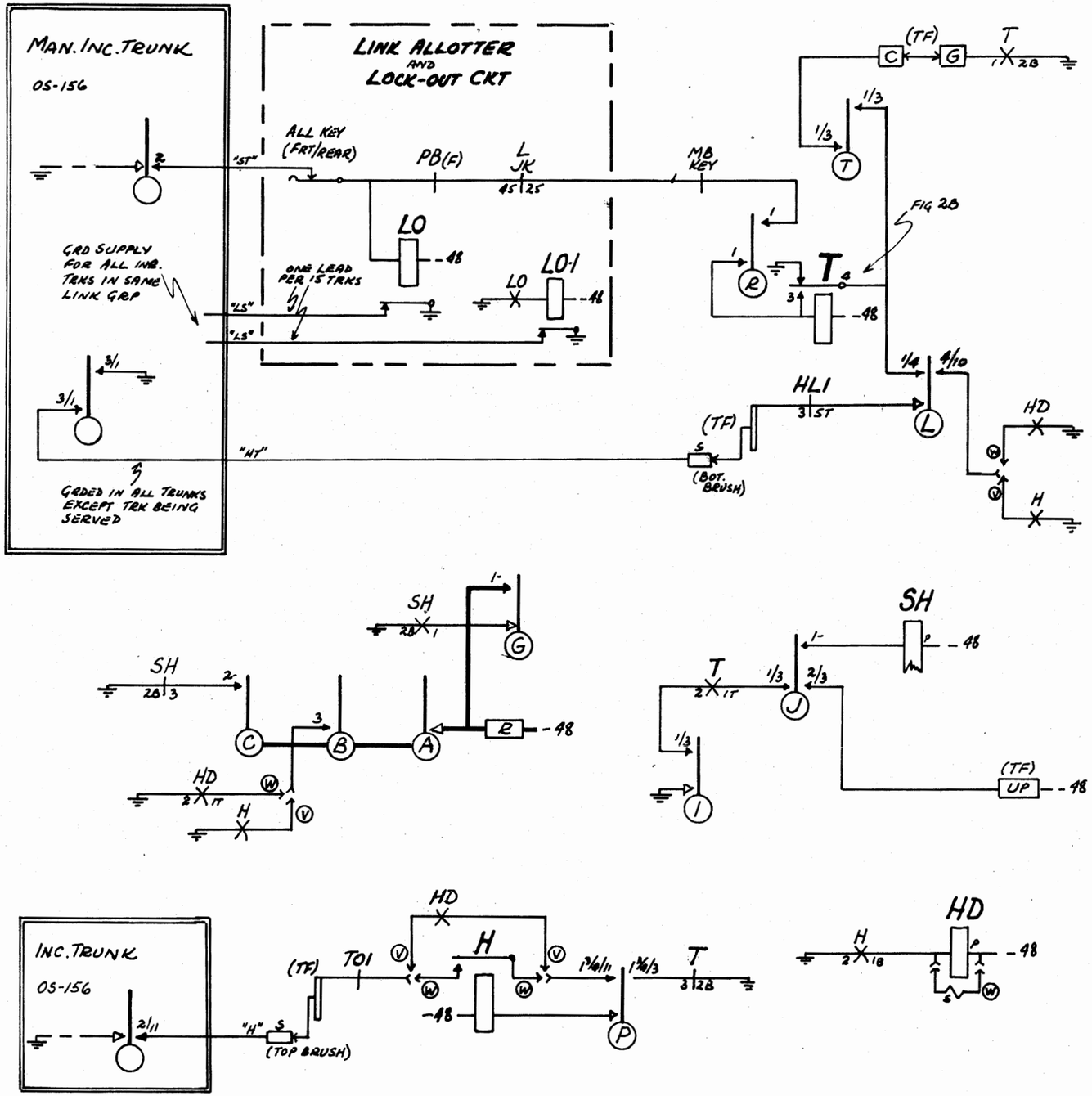

SEQUENCE CHART

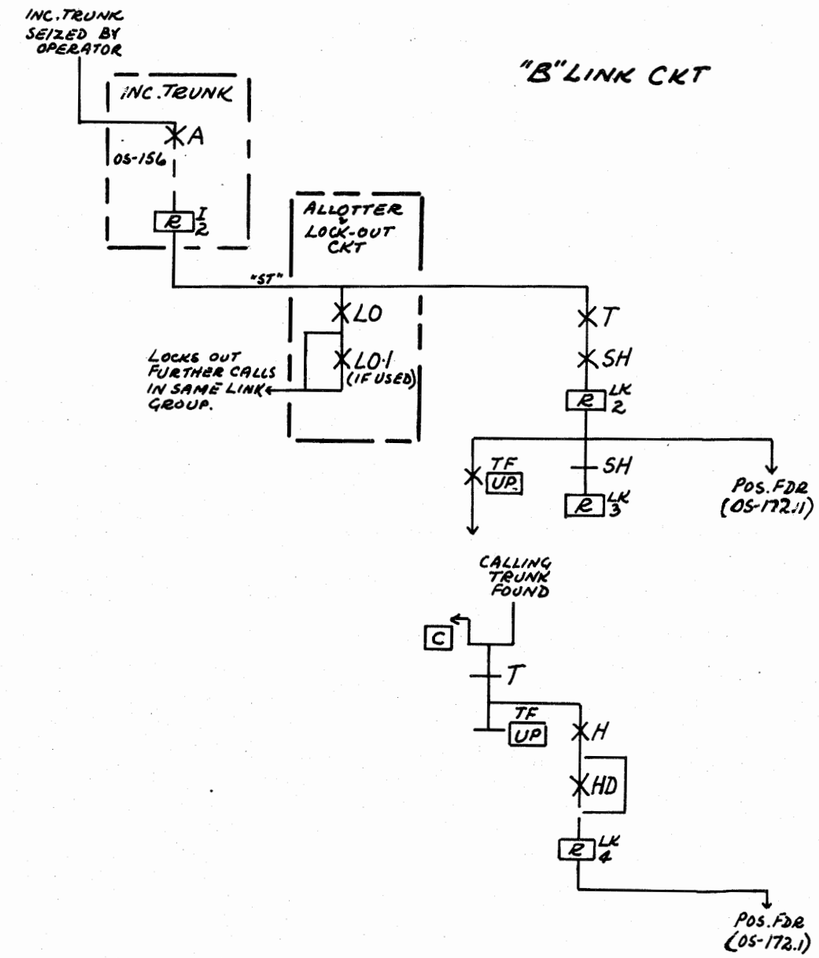

LINK SEQ. SWITCH

1. NORMAL
2. PASS-BY
3. TRUNK HUNT
4. AWTG. POS. HUNT

INC. SEQ. SWITCH

1. NORMAL
2. AWTG. FINDER

SD-21801-011 Iss. 9-D LINK, LINK ALLOTTER

PDB

"B" LINK FINDS CALLING TRUNK

ISSUE	1	
DATE	9-54	
BY	GHH	

ILL. BELL TEL. CO. - PLANT SCHOOL

PANEL GCO		OS-171.1

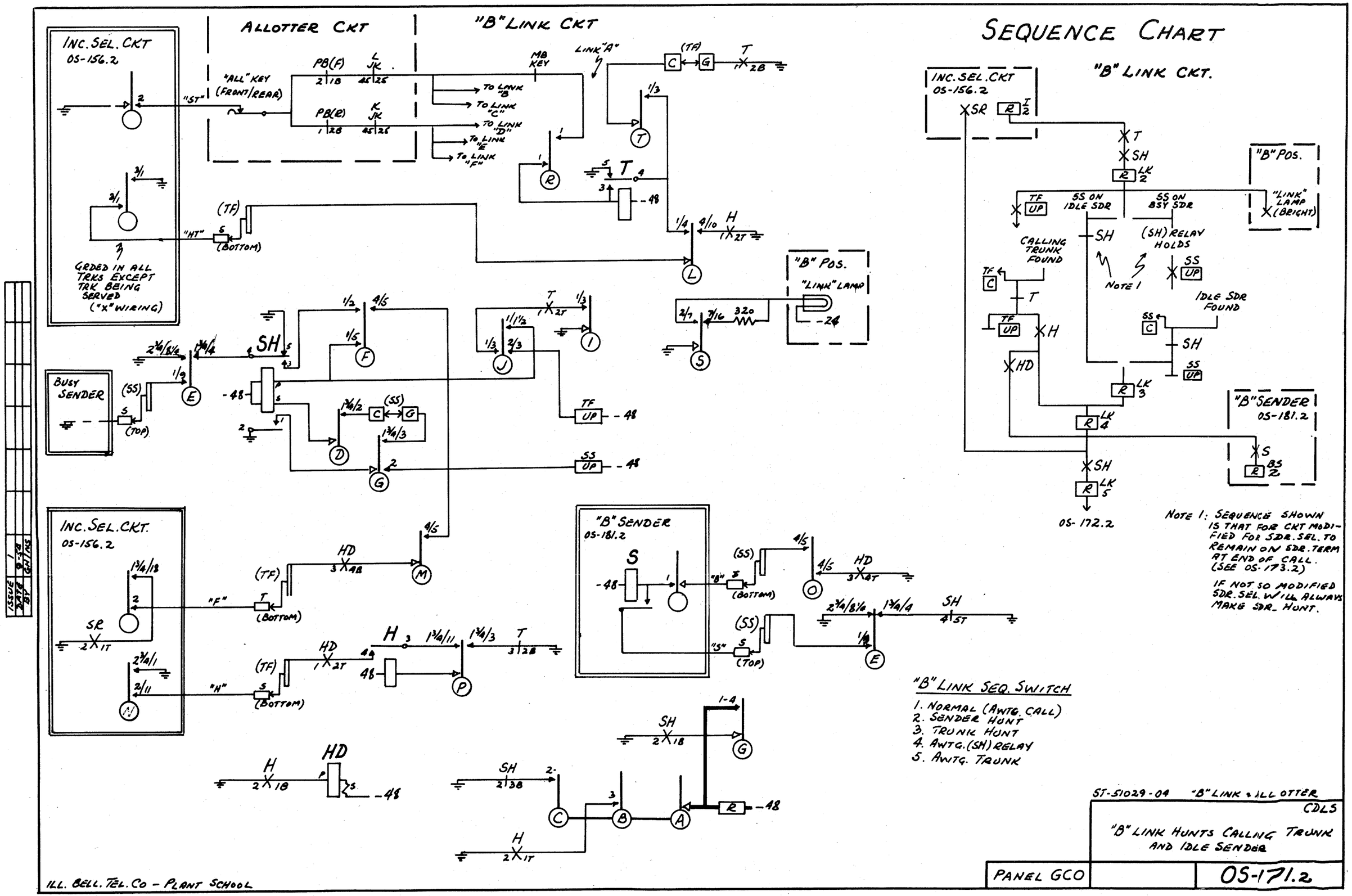
ALLOTTER CKT
"B" LINK CKT
INC. SEL. CKT
OS-156.2
"ALL" KEY (FRONT/REAR)
PB(F)
PB(R)
TO LINK "B"
TO LINK "C"
TO LINK "D"
TO LINK "E"
TO LINK "F"
MB KEY
LINK "A"
GRDED IN ALL TRKS EXCEPT TRK BEING SERVED ("X" WIRING)
"ST"
"HT"
(BOTTOM)
BUSY SENDER
(TOP)
"B" POS.
"LINK" LAMP
INC. SEL. CKT.
OS-156.2
"F"
"H"
"B" SENDER
OS-181.2
"B"
"S"
SEQUENCE CHART
"B" LINK CKT.
INC. SEL. CKT
OS-156.2
"B" POS.
"LINK" LAMP (BRIGHT)
SS ON IDLE SDR
SS ON BSY SDR
CALLING TRUNK FOUND
(SH) RELAY HOLDS
NOTE 1
IDLE SDR FOUND
"B" SENDER
OS-181.2
OS-172.2
NOTE 1: SEQUENCE SHOWN IS THAT FOR CKT MODIFIED FOR SDR. SEL. TO REMAIN ON SDR. TERM AT END OF CALL. (SEE OS-173.2)
IF NOT SO MODIFIED SDR. SEL. WILL ALWAYS MAKE SDR. HUNT.
"B" LINK SEQ. SWITCH
1. NORMAL (AWTG. CALL)
2. SENDER HUNT
3. TRUNK HUNT
4. AWTG. (SH) RELAY
5. AWTG. TRUNK
ST-51029-04 "B" LINK & ALL OTTER
CDLS
"B" LINK HUNTS CALLING TRUNK AND IDLE SENDER
PANEL GCO
OS-171.2
ILL. BELL. TEL. CO - PLANT SCHOOL

"B" LINK & ALLOTTER

SEQUENCE CHART

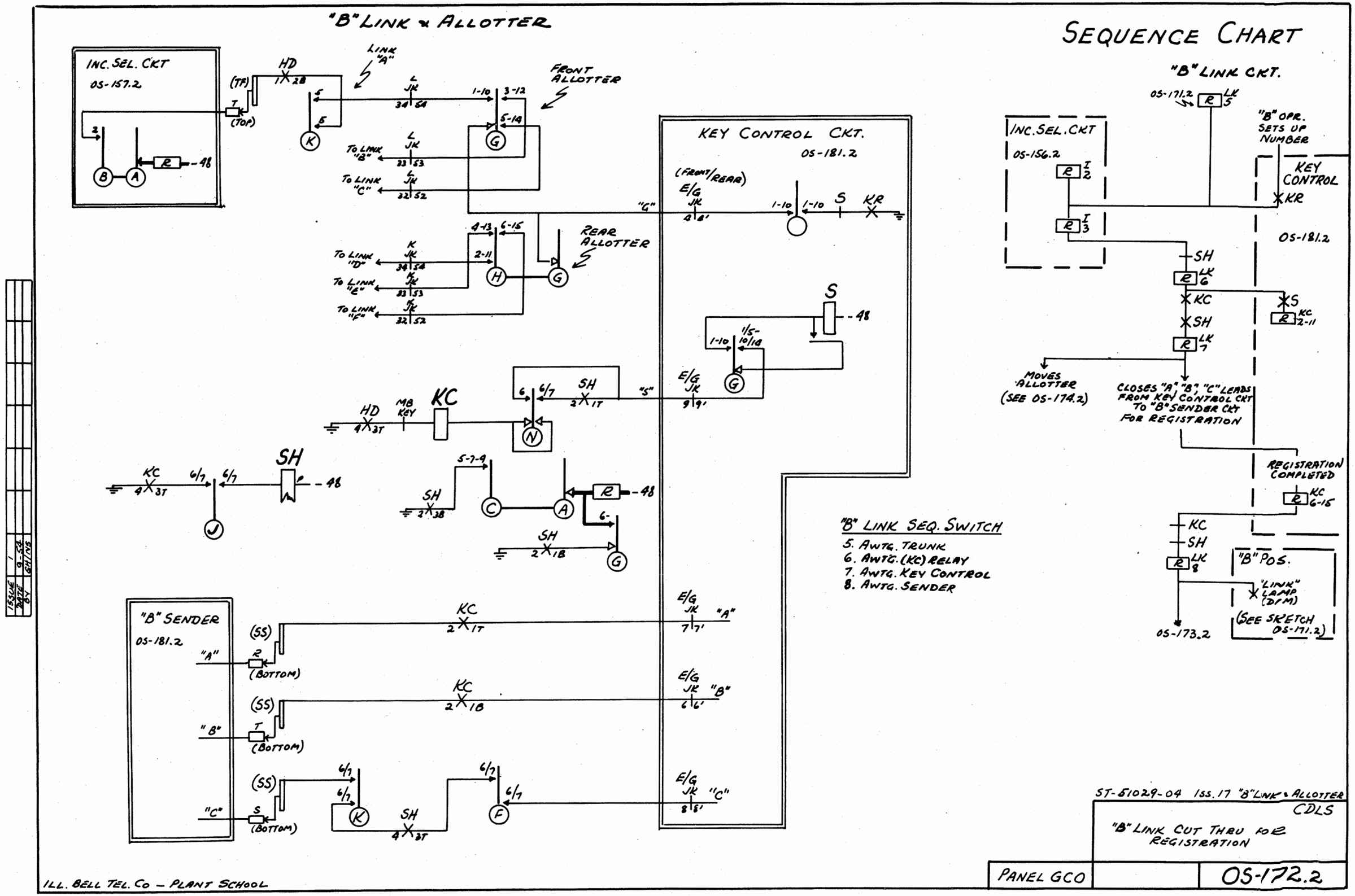

SEQUENCE CHART

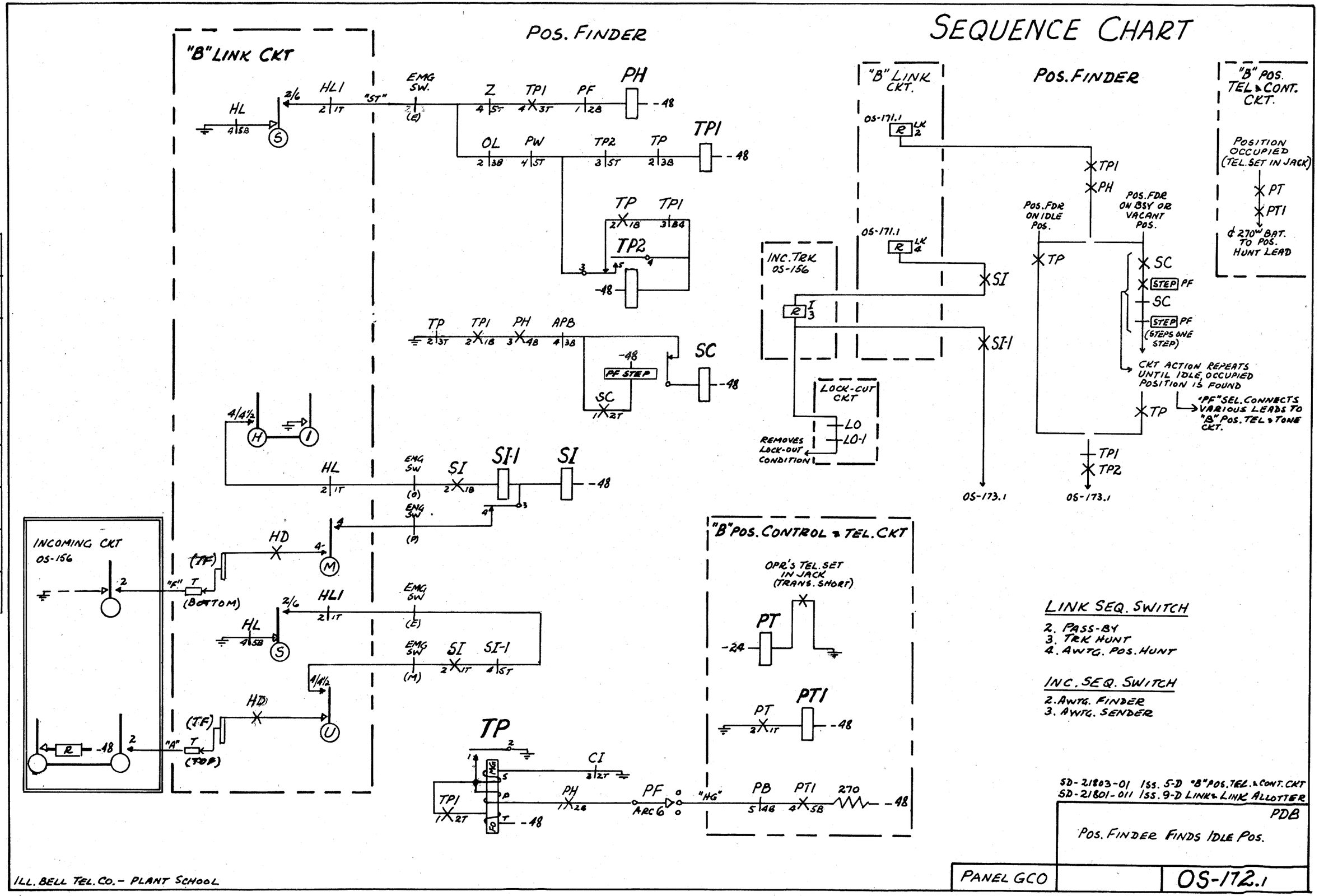

SEQUENCE CHART

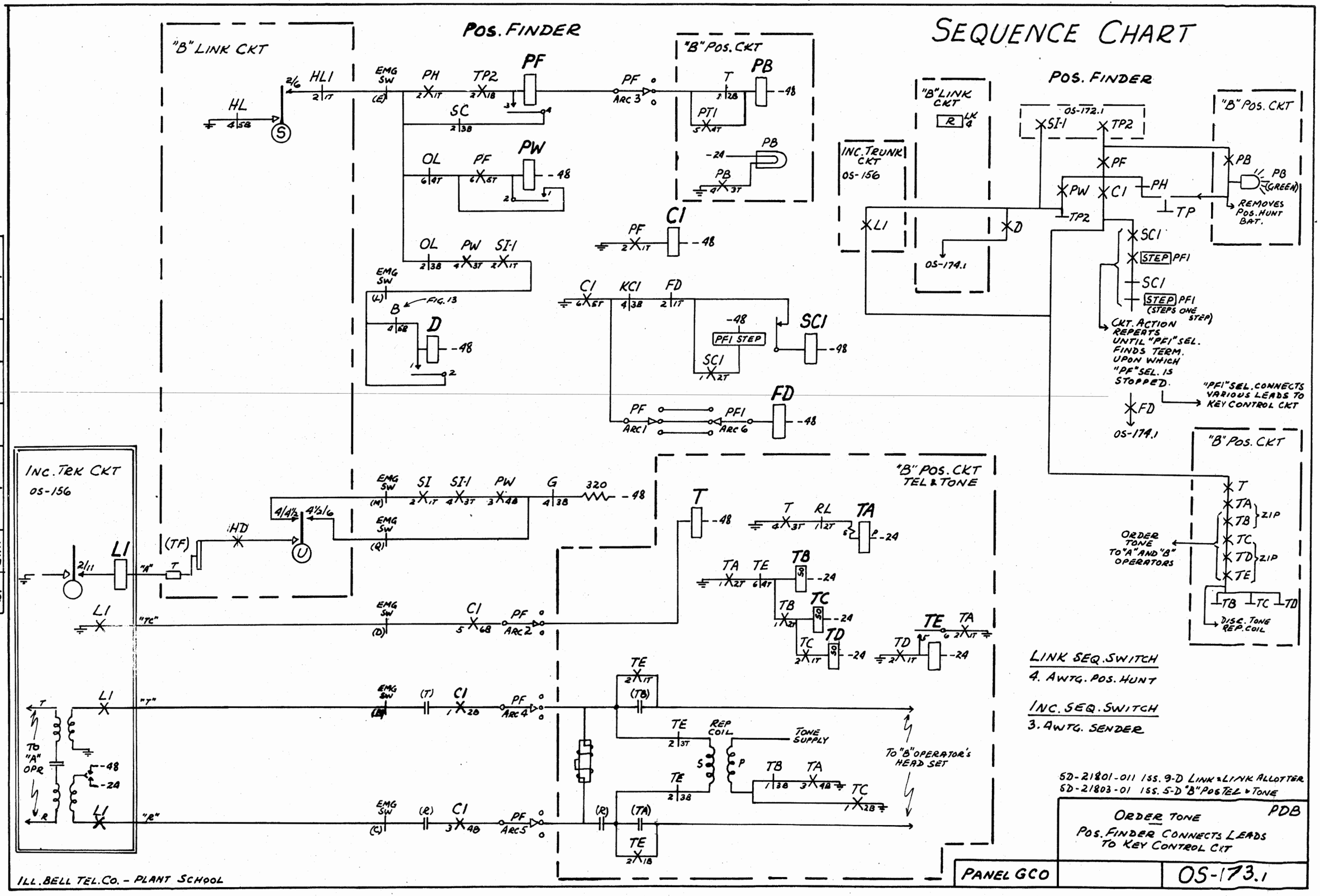

LINK SEQ. SWITCH
4. AWTG. POS. HUNT

INC. SEQ. SWITCH
3. AWTG. SENDER

SD-21801-011 ISS. 9-D LINK & LINK ALLOTTER
SD-21803-01 ISS. 5-D "B" POS TEL & TONE

ORDER TONE
POS. FINDER CONNECTS LEADS TO KEY CONTROL CKT

PDB

PANEL GCO

OS-173.1

ILL. BELL TEL. CO. - PLANT SCHOOL

SEQUENCE CHART

"B" LINK CKT.

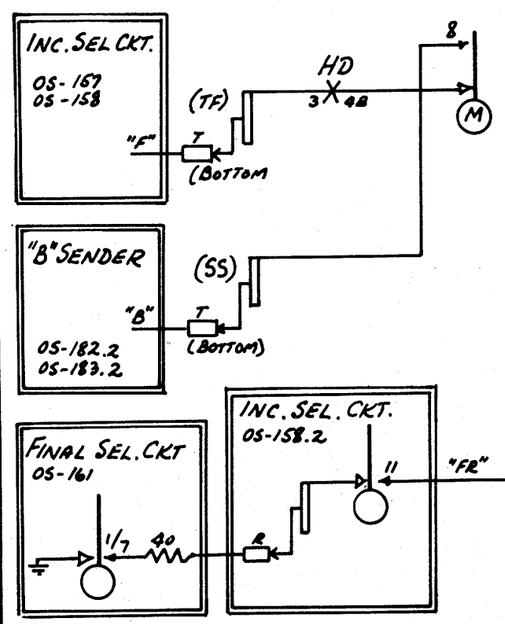

MICH. BELL TEL. CO. MODIFICATION TO HAVE SDR. SEL. REMAIN ON LAST SDR. TERM. USED

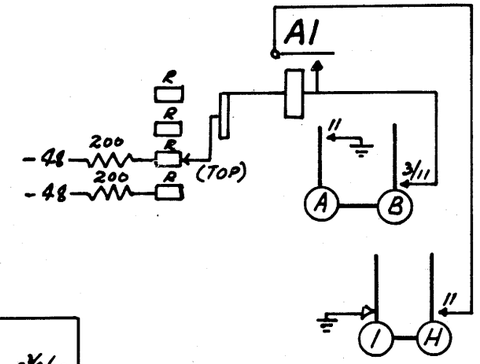

"B" LINK SEQ. SWITCH

8. AWTG. SENDER
9. AWTG. FINAL
10. AWTG. TRUNK
11. S.S. RETURN
12. T.F. RETURN
13/16 PASS-BY
17. AWTG. ASSIGNMENT

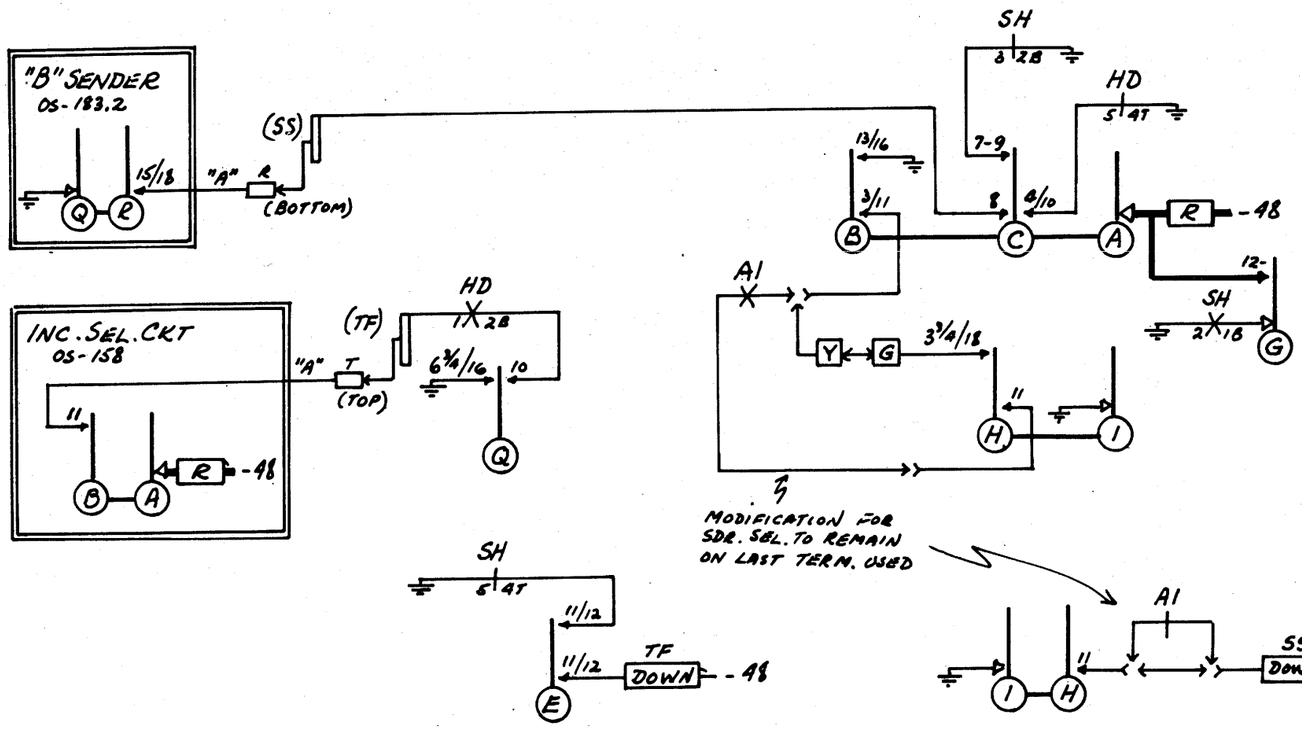

"B" LINK CKT.

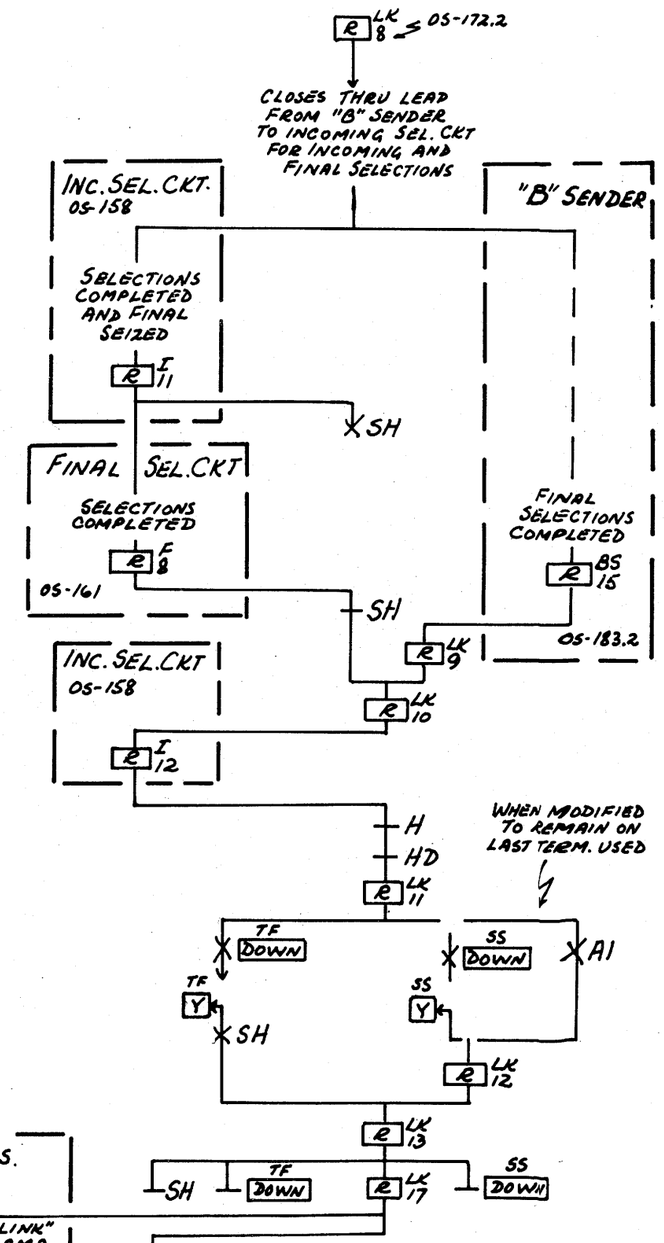

ST-51029-04 ISS. 17 "B" LINK & ALLOTTER

CDLS

"B" LINK CUT THRU FOR INCOMING AND FINAL SELECTIONS

RELEASE

PANEL GCO

OS-173.2

ILL. BELL TEL. CO. – PLANT SCHOOL

SEQUENCE CHART

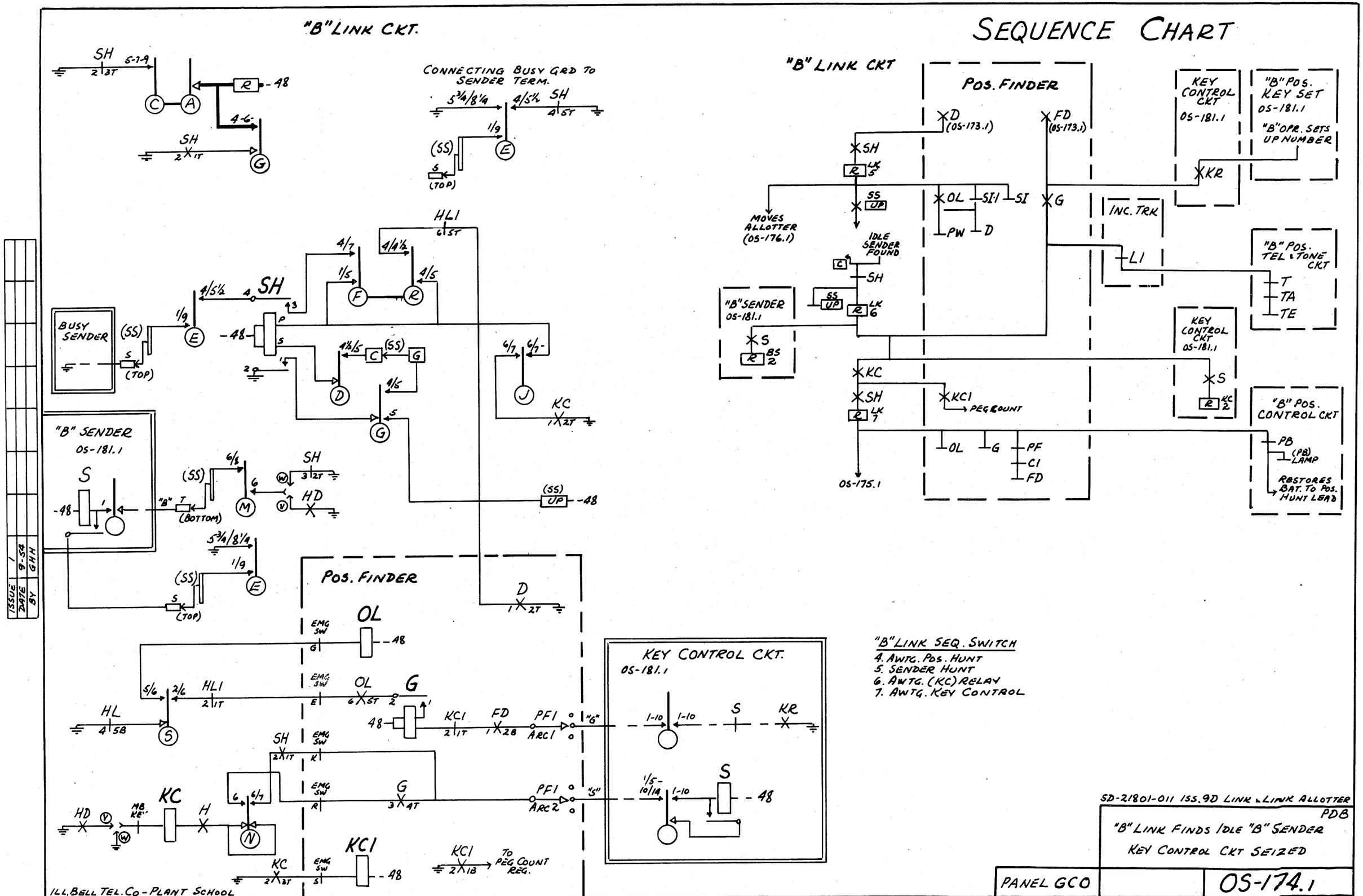

MOVING ALLOTTERS

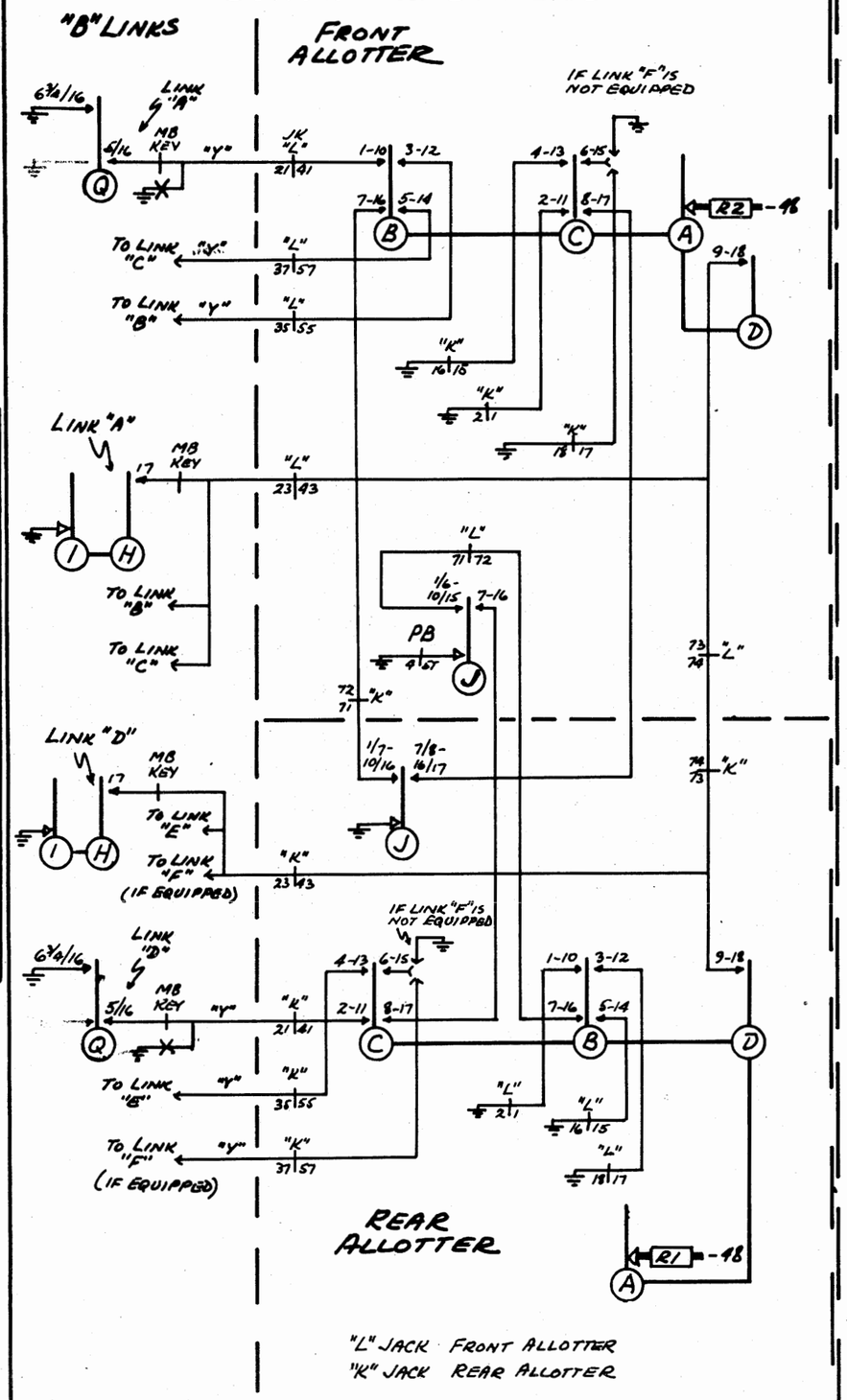

ALLOTTING LINKS

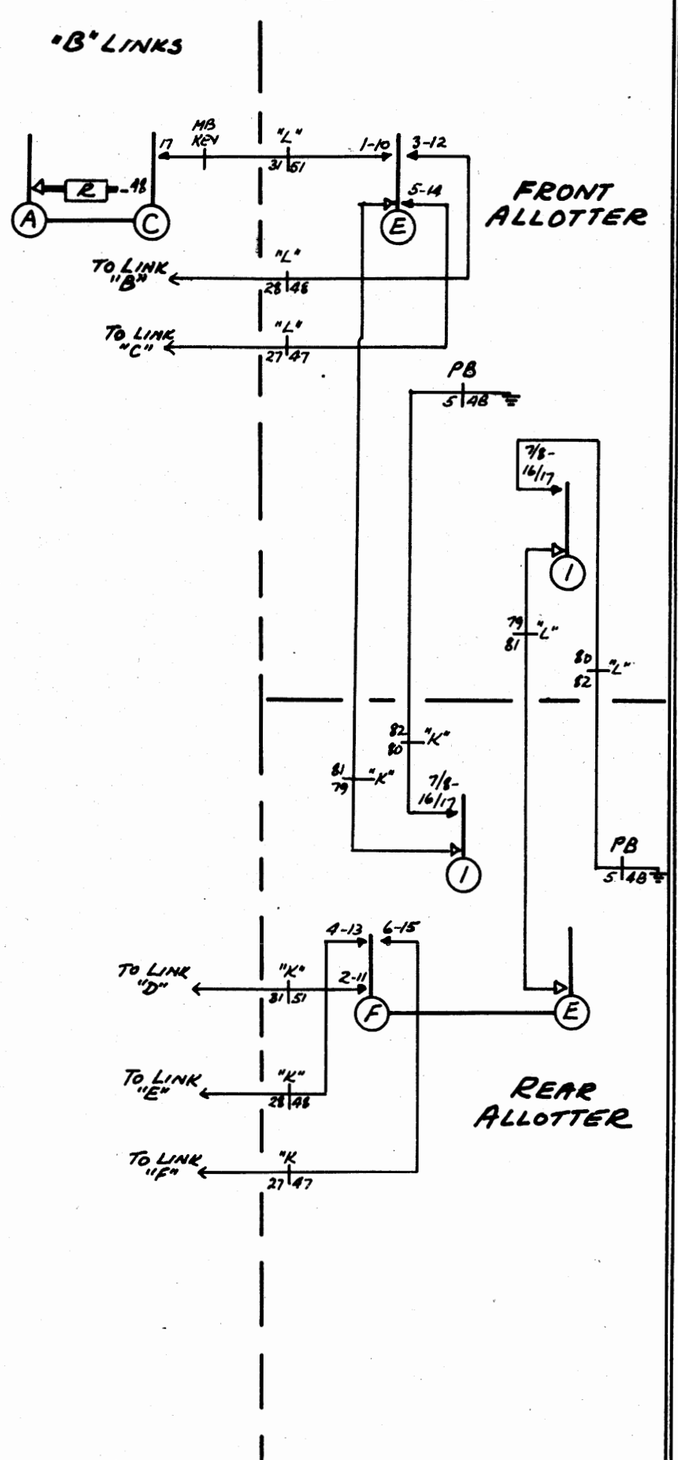

SEQUENCE CHART

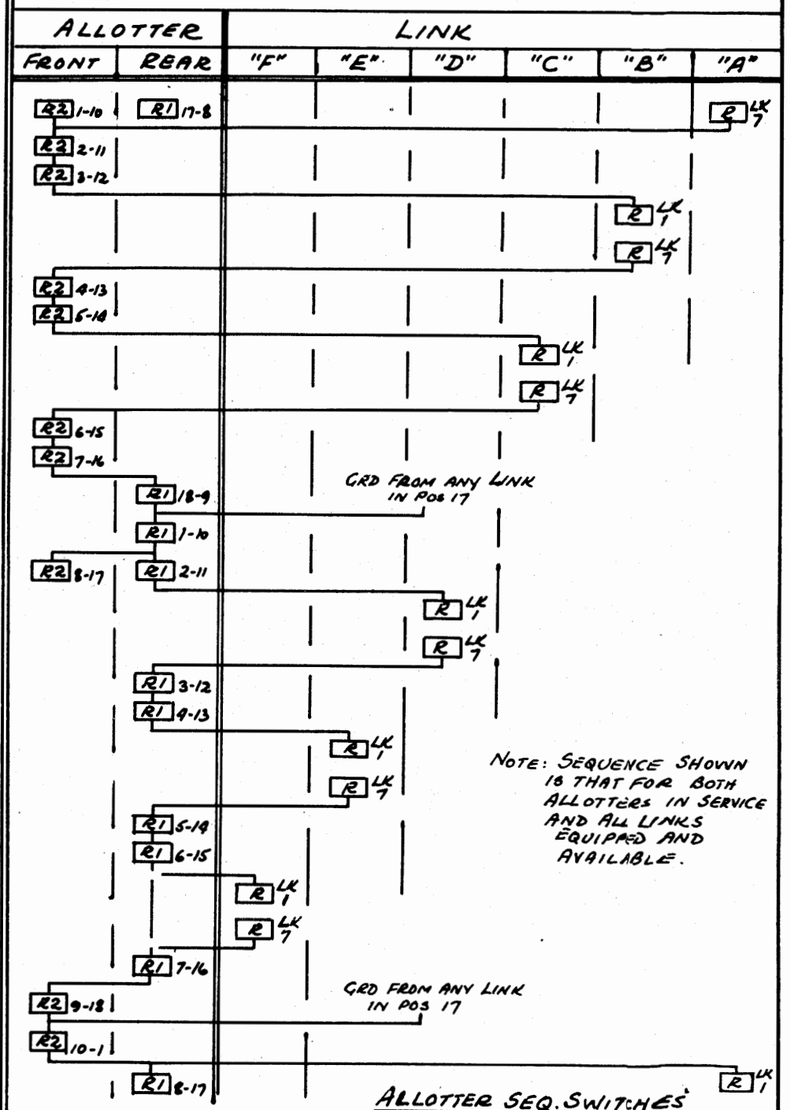

ALLOTTER SEQ. SWITCHES

FRONT (R2)		REAR (R1)	
1-10	ASSIGN LINK 1 (A)	2-11	ASSIGN LINK 2 (D)
3-12	" " 3 (B)	4-13	" " 4 (E)
5-14	" " 5 (C)	6-14	" " 6 (F)

7-16 MOVE OTHER ALLOTTER
8-17 AWTG. " "
9-18 ALL SDR. SELS. BUSY

ST-51029-04 ISS. 17 "B" LINK ALLOTTER

CDLS

ALLOTTING OF LINKS AND MOVING ALLOTTERS

PANEL GCO

OS-174.2

ILL. BELL TEL. CO – PLANT SCHOOL

SEQUENCE CHART

"B" LINK

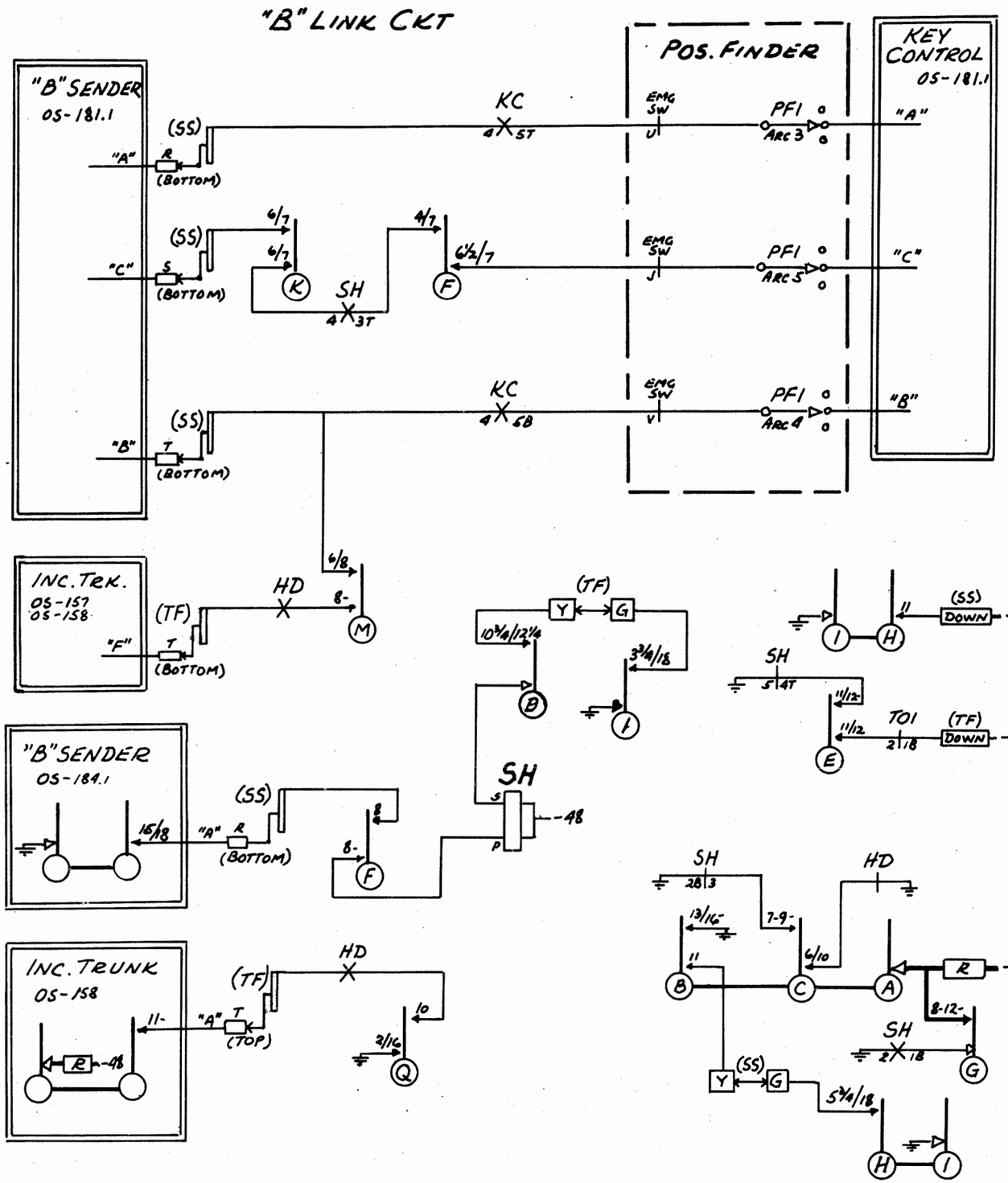

LINK SEQ. SWITCH

7. AWTG. KEY CONTROL
8. AWTG. SENDER
9. PASS-BY
10. AWTG. TRUNK
11. SS. RETURN
12. TF RETURN
13. AWTG. ASSIGNMENT

KEY CONTROL SEQ. SWITCH

6-15 AWTG. KEY RELEASE

INC. SEQ. SWITCH

12. TRUNK CLOSURE

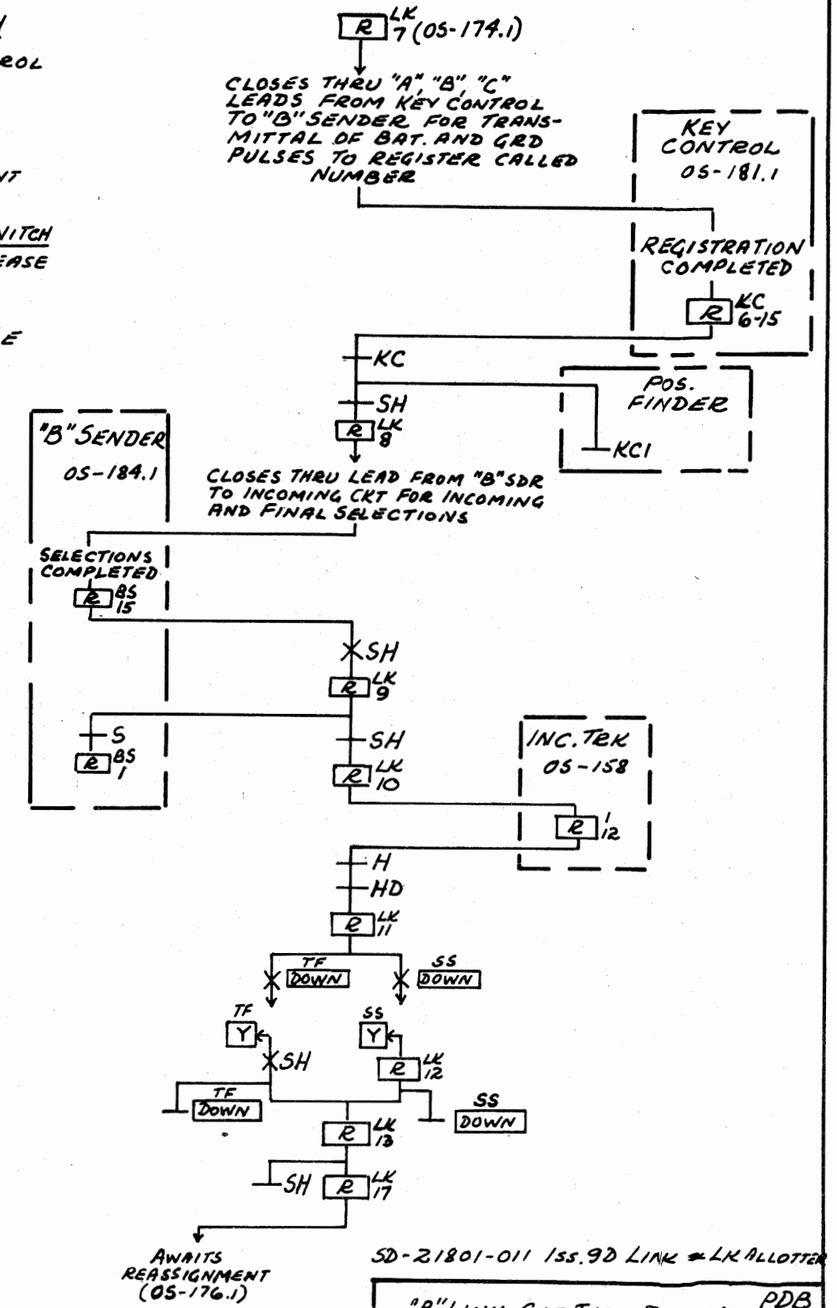

SD-21801-011 Iss. 9D LINK = LK ALLOTTER

"B" LINK CUT THRU DIALING REGISTRATION AND SELECTIONS

RELEASE

PDB

PANEL GCO

OS-175.1

ISSUE	DATE	BY
1	9-54	GHH

ILL. BELL TEL. CO – PLANT SCHOO

MOVING ALLOTTERS

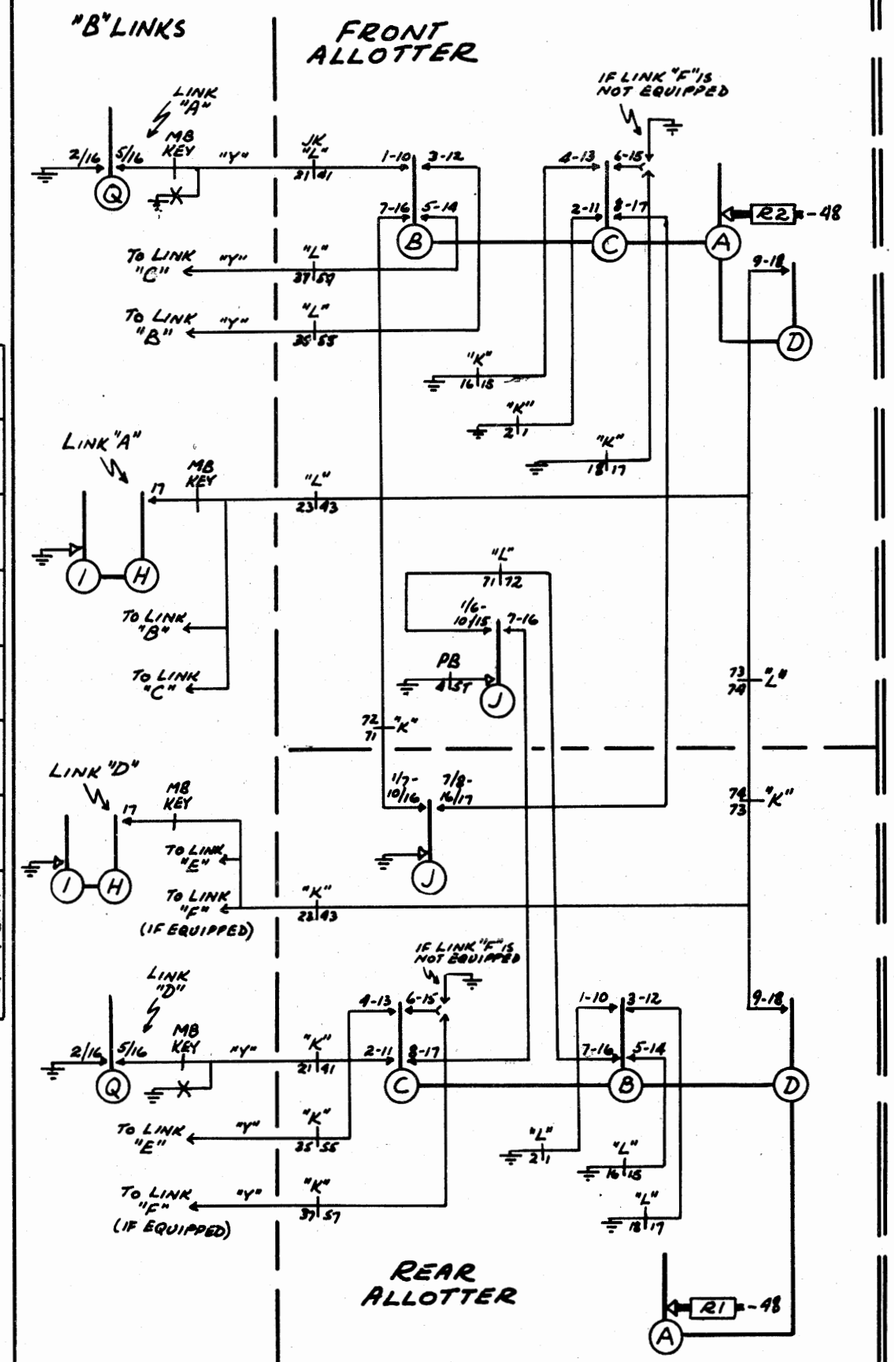

ALLOTTING LINKS

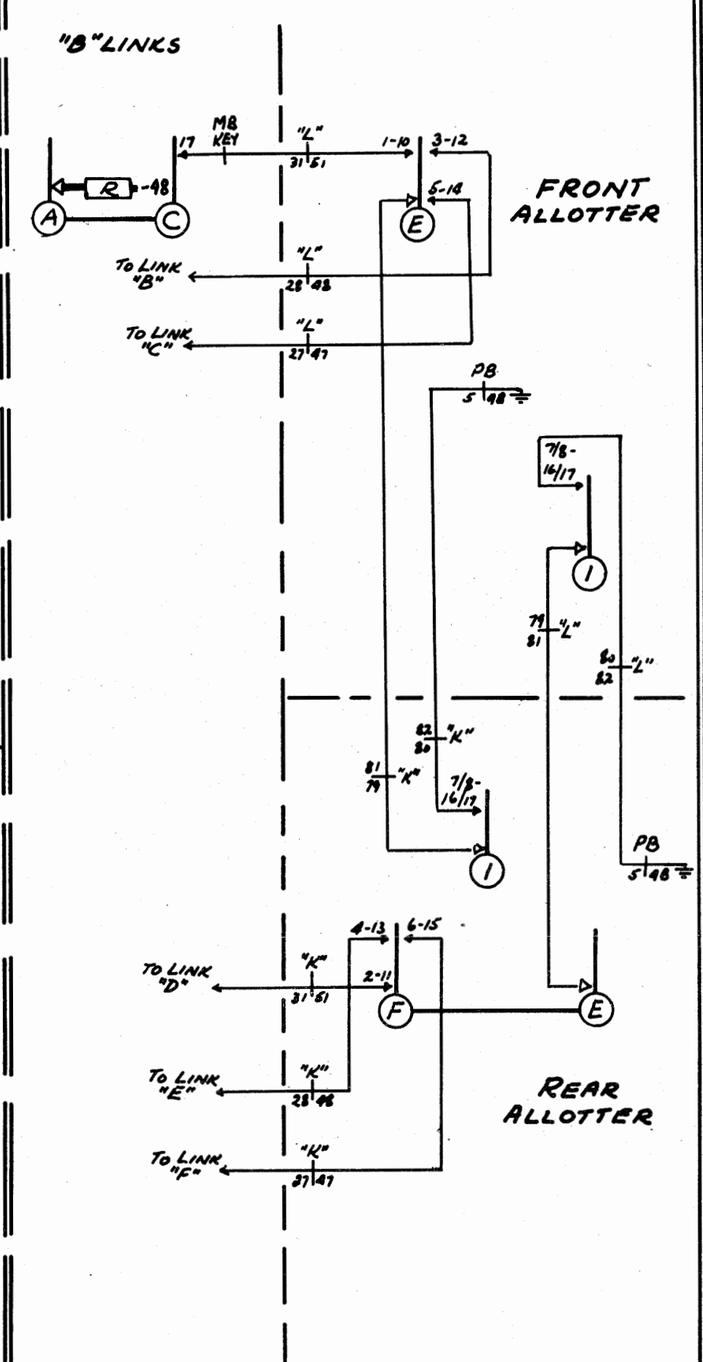

SEQUENCE CHART

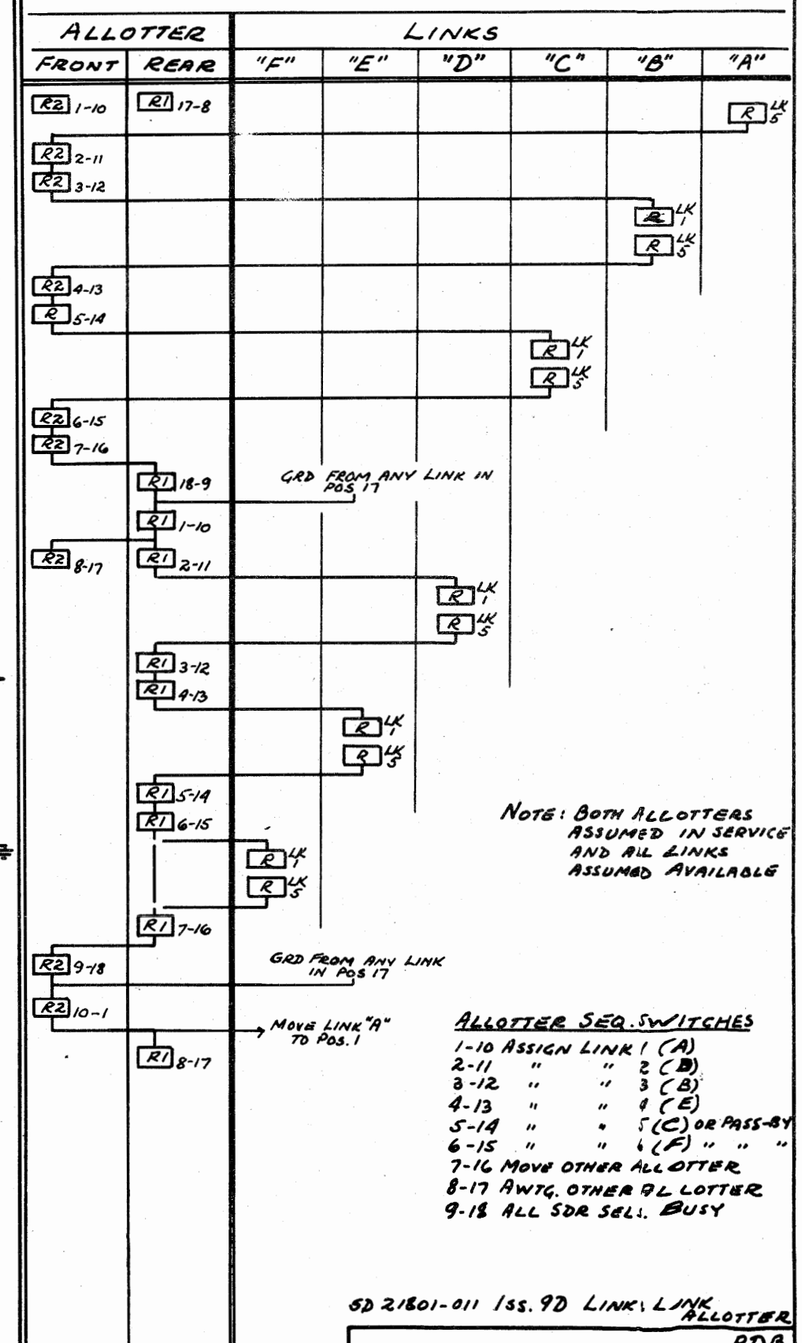

NOTE: BOTH ALLOTTERS ASSUMED IN SERVICE AND ALL LINKS ASSUMED AVAILABLE

ALLOTTER SEQ. SWITCHES

1-10 ASSIGN LINK 1 (A)
2-11 " " 2 (D)
3-12 " " 3 (B)
4-13 " " 4 (E)
5-14 " " 5 (C) OR PASS-BY
6-15 " " 6 (F) " " "
7-16 MOVE OTHER ALLOTTER
8-17 AWTG. OTHER ALLOTTER
9-18 ALL SDR SELS. BUSY

ISSUE	DATE	BY
1	9-74	GHH

SD 21801-011 ISS. 9D LINKS: LINK ALLOTTER

PDB

ALLOTTING OF LINKS AND MOVING ALLOTTERS

PANEL GCO

OS-176.1

ILL. BELL TEL. CO — PLANT SCHOOL

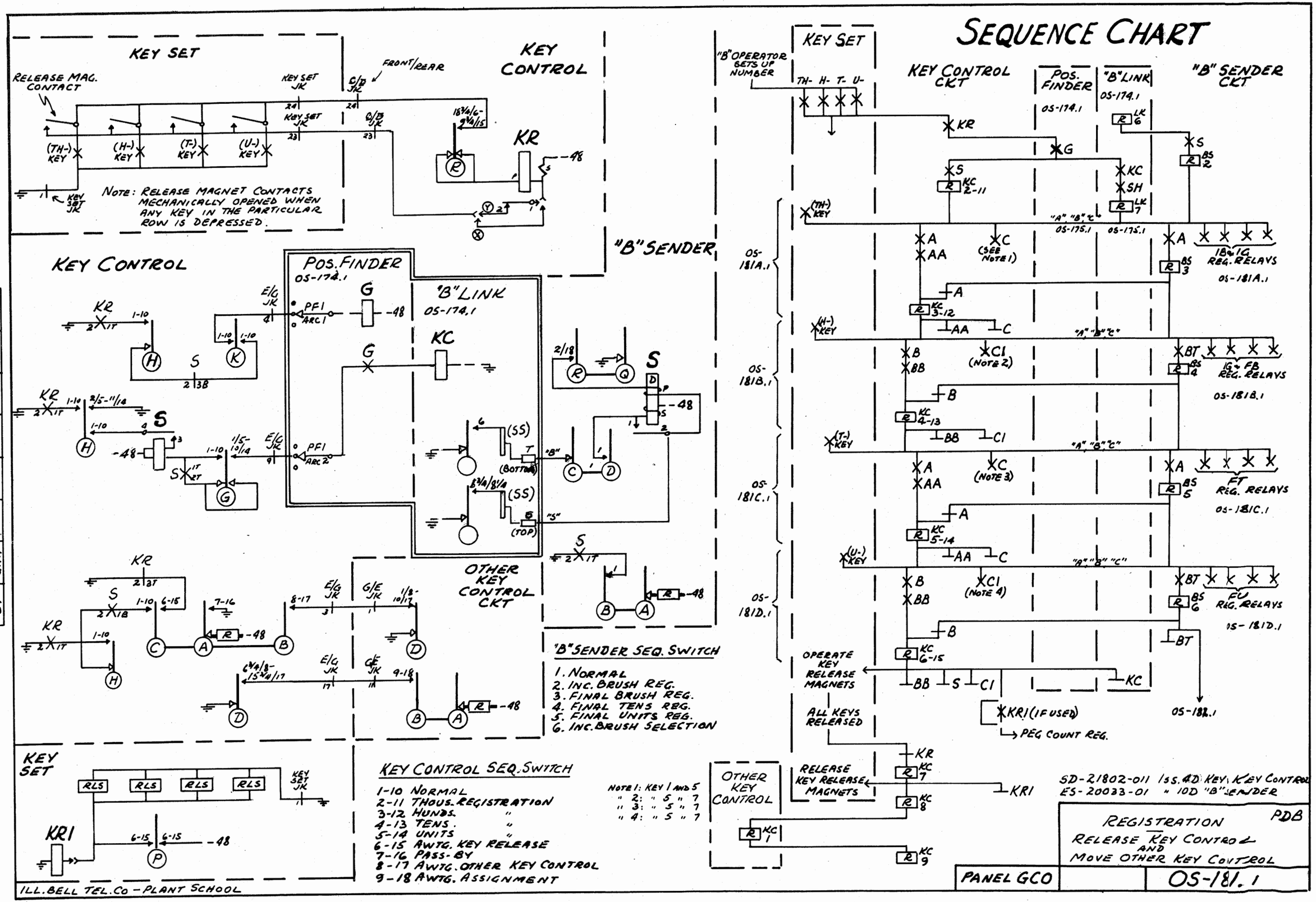
SEQUENCE CHART
KEY SET
RELEASE MAG. CONTACT
KEY SET JK
FRONT/REAR
(TH-) KEY
(H-) KEY
(T-) KEY
(U-) KEY
NOTE: RELEASE MAGNET CONTACTS MECHANICALLY OPENED WHEN ANY KEY IN THE PARTICULAR ROW IS DEPRESSED.
KEY CONTROL
KR
"B" SENDER
KEY CONTROL
POS. FINDER OS-174.1
"B" LINK OS-174.1
KC
OTHER KEY CONTROL CKT
"B" SENDER SEQ. SWITCH
1. NORMAL
2. INC. BRUSH REG.
3. FINAL BRUSH REG.
4. FINAL TENS REG.
5. FINAL UNITS REG.
6. INC. BRUSH SELECTION
KEY SET
RLS
KR1
KEY CONTROL SEQ. SWITCH
1-10 NORMAL
2-11 THOUS. REGISTRATION
3-12 HUNDS. "
4-13 TENS. "
5-14 UNITS "
6-15 AWTG. KEY RELEASE
7-16 PASS-BY
8-17 AWTG. OTHER KEY CONTROL
9-18 AWTG. ASSIGNMENT
NOTE 1: KEY 1 AND 5
" 2: " 5 " 7
" 3: " 5 " 7
" 4: " 5 " 7
OTHER KEY CONTROL
"B" OPERATOR SETS UP NUMBER
KEY SET
KEY CONTROL CKT
POS. FINDER
"B" LINK OS-174.1
"B" SENDER CKT
OS-181A.1
OS-181B.1
OS-181C.1
OS-181D.1
1B & 1C REG. RELAYS OS-181A.1
1G & FB REG. RELAYS OS-181B.1
FT REG. RELAYS OS-181C.1
FU REG. RELAYS OS-181D.1
OS-182.1
OPERATE KEY RELEASE MAGNETS
ALL KEYS RELEASED
KR1 (IF USED)
PEG COUNT REG.
RELEASE KEY RELEASE MAGNETS
OTHER KEY CONTROL
SD-21802-011 1SS. 4D KEY, KEY CONTROL
ES-20033-01 " 10D "B" SENDER
REGISTRATION
RELEASE KEY CONTROL AND MOVE OTHER KEY CONTROL
PDB
PANEL GCO
OS-181.1
ILL. BELL TEL. CO - PLANT SCHOOL
ISSUE 1
DATE 9-54
BY GHH

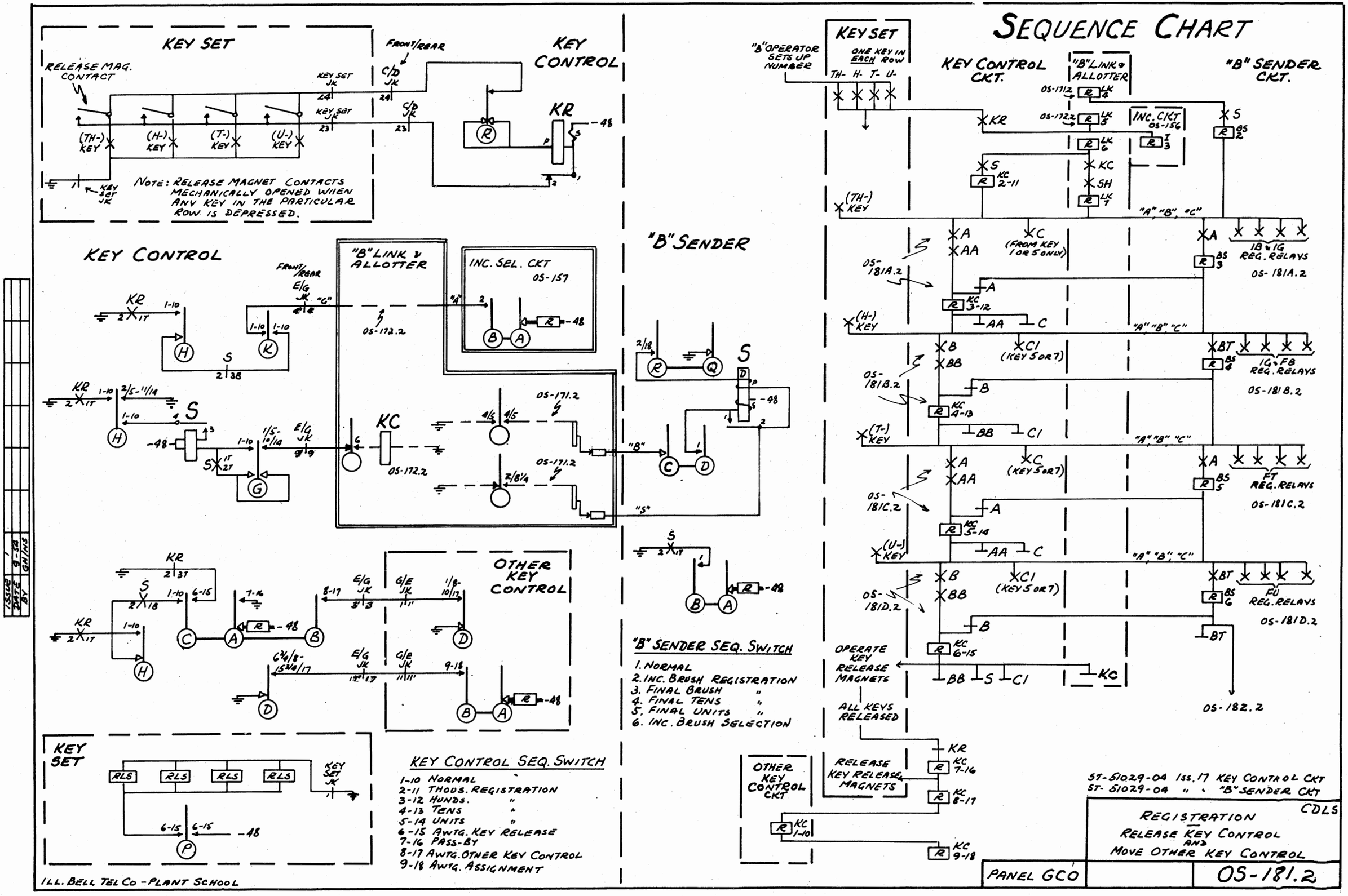
SEQUENCE CHART
KEY SET
RELEASE MAG. CONTACT
(TH-) KEY
(H-) KEY
(T-) KEY
(U-) KEY
KEY SET JK
FRONT/REAR
C/D JK
NOTE: RELEASE MAGNET CONTACTS MECHANICALLY OPENED WHEN ANY KEY IN THE PARTICULAR ROW IS DEPRESSED.
KEY CONTROL
KR
-48
KEY CONTROL
"B" LINK & ALLOTTER
INC. SEL. CKT OS-157
E/G JK
OS-172.2
OS-171.2
KC
"B" SENDER
"B" SENDER SEQ. SWITCH
1. NORMAL
2. INC. BRUSH REGISTRATION
3. FINAL BRUSH "
4. FINAL TENS "
5. FINAL UNITS "
6. INC. BRUSH SELECTION
OTHER KEY CONTROL
KEY SET
RLS
KEY CONTROL SEQ. SWITCH
1-10 NORMAL
2-11 THOUS. REGISTRATION
3-12 HUNDS. "
4-13 TENS "
5-14 UNITS "
6-15 AWTG. KEY RELEASE
7-16 PASS-BY
8-17 AWTG. OTHER KEY CONTROL
9-18 AWTG. ASSIGNMENT
"B" OPERATOR SETS UP NUMBER
KEY SET
ONE KEY IN EACH ROW
TH- H- T- U-
KEY CONTROL CKT.
"B" LINK & ALLOTTER
INC. CKT OS-156
"B" SENDER CKT.
OS-181A.2
OS-181B.2
OS-181C.2
OS-181D.2
1B & 1G REG. RELAYS
1G & FB REG. RELAYS
FT REG. RELAYS
FU REG. RELAYS
OPERATE KEY RELEASE MAGNETS
ALL KEYS RELEASED
RELEASE KEY RELEASE MAGNETS
OTHER KEY CONTROL CKT
OS-182.2
ST-51029-04 Iss. 17 KEY CONTROL CKT
ST-51029-04 " " "B" SENDER CKT
CDLS
REGISTRATION
RELEASE KEY CONTROL AND MOVE OTHER KEY CONTROL
PANEL GCO
OS-181.2
ILL. BELL TEL CO - PLANT SCHOOL

KEY SET AND KEY CONTROL CKT

"B" SENDER

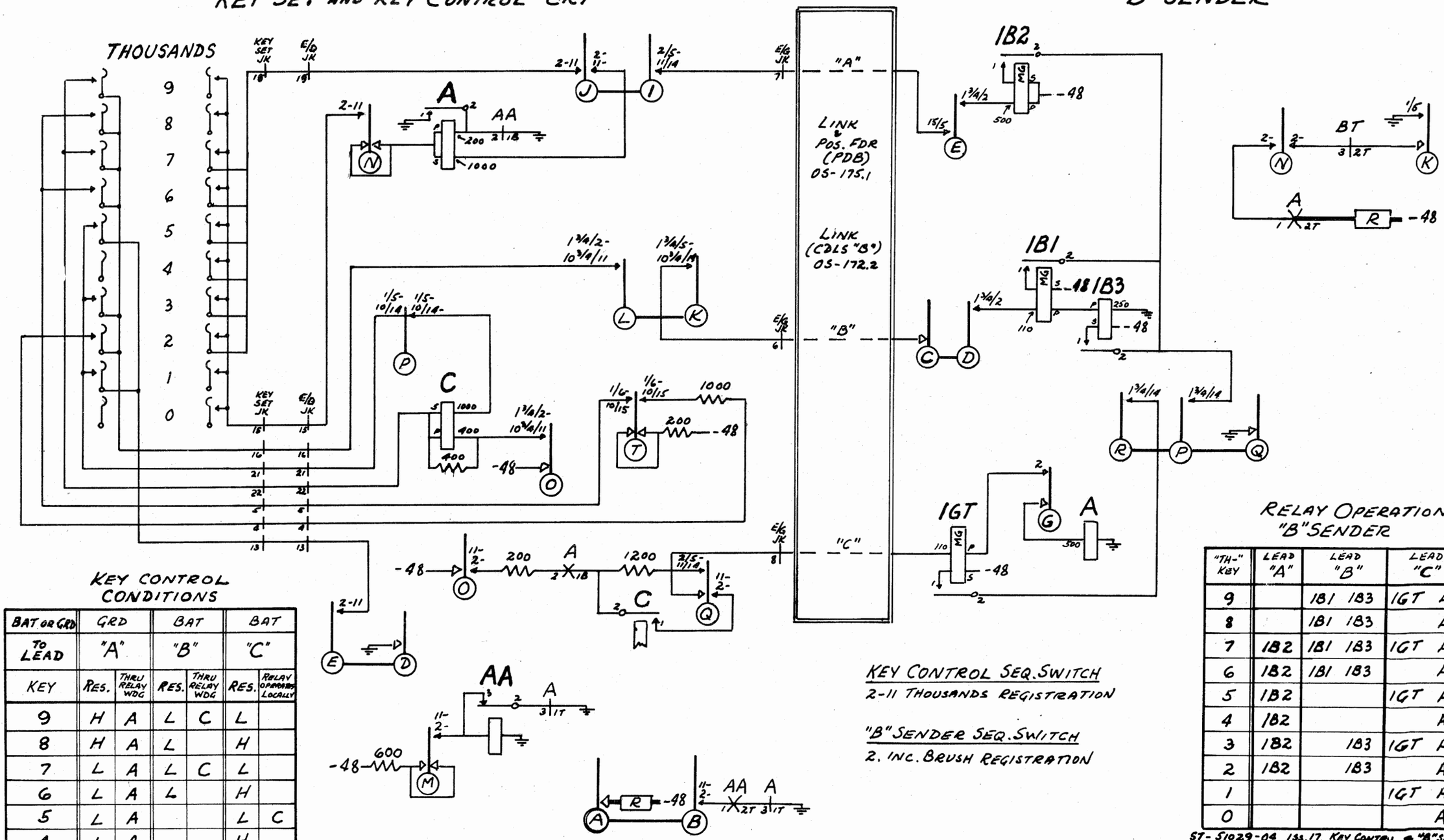

KEY CONTROL CONDITIONS

BAT OR GRD TO LEAD	GRD "A"		BAT "B"		BAT "C"	
KEY	RES.	THRU RELAY WDG	RES.	THRU RELAY WDG	RES.	RELAY OPERATES LOCALLY
9	H	A	L	C	L	
8	H	A	L		H	
7	L	A	L	C	L	
6	L	A	L		H	
5	L	A			L	C
4	L	A			H	
3	L	A	H	C	L	
2	L	A	H		H	
1	H	A			L	C
0	H	A			H	

H = 1200ω (OR 1400ω)
L = 200ω
BLANK = OPEN CKT

KEY CONTROL SEQ. SWITCH

2-11 THOUSANDS REGISTRATION

"B" SENDER SEQ. SWITCH

2. INC. BRUSH REGISTRATION

RELAY OPERATION "B" SENDER

"TH-" KEY	LEAD "A"	LEAD "B"	LEAD "C"
9		1B1 1B3	1GT A
8		1B1 1B3	A
7	1B2	1B1 1B3	1GT A
6	1B2	1B1 1B3	A
5	1B2		1GT A
4	1B2		A
3	1B2	1B3	1GT A
2	1B2	1B3	A
1			1GT A
0			A

ST-51029-04 ISS.17 KEY CONTROL & "B" SENDER
SD-21802-011 ISS.4D KEY CONTROL
ES-20033-01 " 10D "B" SENDER

ISSUE	1
DATE	9-5A
BY	GHH

THOUSANDS REGISTRATION

PDB
CDLS

PANEL GCO

OS-181A.1.2

ILL. BELL TEL CO - PLANT SCHOOL

KEY SET AND KEY CONTROL CKT

"B" SENDER

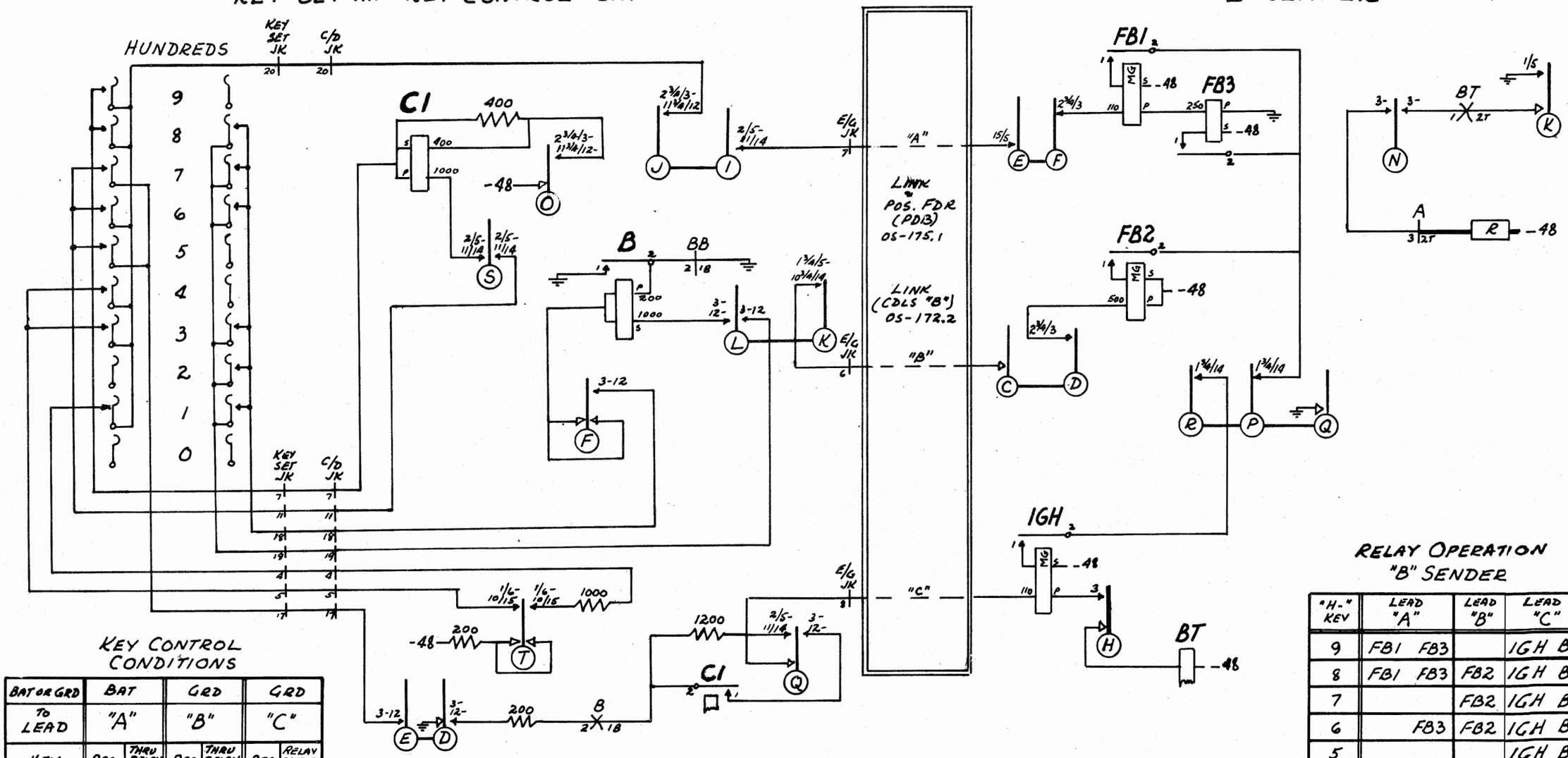

KEY CONTROL CONDITIONS

BAT OR GRD TO LEAD	BAT "A"		GRD "B"		GRD "C"	
KEY	RES.	THRU RELAY WDG	RES.	THRU RELAY WDG	RES.	RELAY OPERATED LOCALLY
9	L	C1	H	B	L	
8	L	C1	L	B	L	
7			L	B	L	C1
6	H	C1	L	B	L	
5			H	B	L	C1
4	L		H	B	H	
3	L		L	B	H	
2			L	B	H	
1	H		L	B	H	
0			H	B	H	

H = 1200ω (OR 1400ω)
L = 200ω
BLANK = OPEN CKT

RELAY OPERATION "B" SENDER

"H-" KEY	LEAD "A"	LEAD "B"	LEAD "C"
9	FB1 FB3		1GH BT
8	FB1 FB3	FB2	1GH BT
7		FB2	1GH BT
6	FB3	FB2	1GH BT
5			1GH BT
4	FB1 FB3		BT
3	FB1 FB3	FB2	BT
2		FB2	BT
1	FB3	FB2	BT
0			BT

ST-51029-04 ISS. 17 KEY CONTROL & "B" SENDER
SD-21802-011 ISS. 4D KEY CONTROL
ES-20033-01 " 10D "B" SENDER

KEY CONTROL SEQ. SWITCH
3-12 HUNDREDS REGISTRATION

"B" SENDER SEQ. SWITCH
3. FINAL BRUSH REGISTRATION

ISSUE	DATE	BY
1	9-54	GHH

HUNDREDS REGISTRATION

PDB CDLS

PANEL GCO

OS-181 B.1,2

ILL. BELL TEL. CO – PLANT SCHOOL

KEY SET AND KEY CONTROL CKT

"B" SENDER

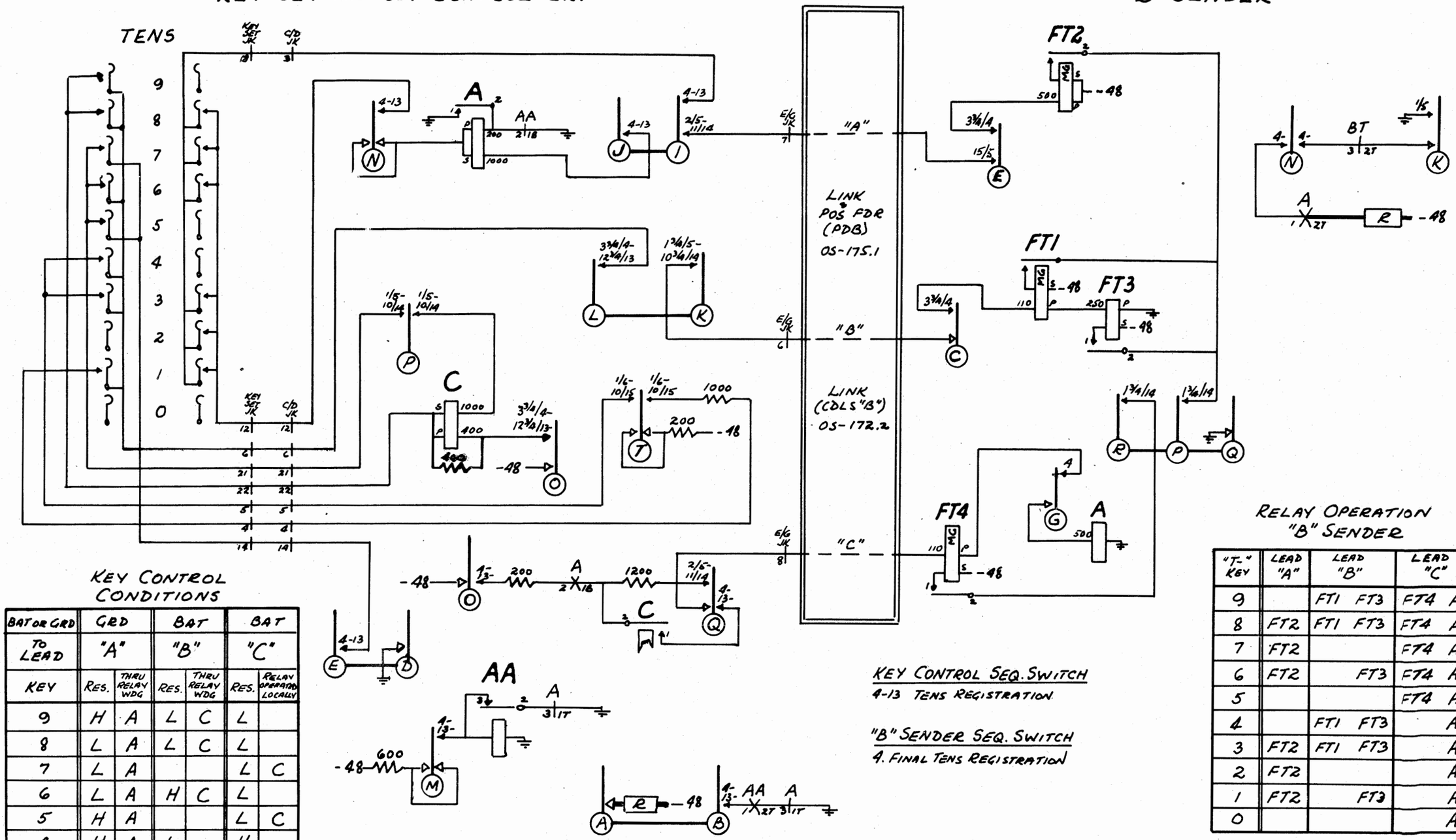

KEY CONTROL CONDITIONS

BAT OR GRD TO LEAD	GRD "A"		BAT "B"		BAT "C"	
KEY	RES.	THRU RELAY WDG	RES.	THRU RELAY WDG	RES.	RELAY OPERATED LOCALLY
9	H	A	L	C	L	
8	L	A	L	C	L	
7	L	A			L	C
6	L	A	H	C	L	
5	H	A			L	C
4	H	A	L		H	
3	L	A	L		H	
2	L	A			H	
1	L	A	H		H	
0	H	A			H	

KEY CONTROL SEQ. SWITCH
4-13 TENS REGISTRATION

"B" SENDER SEQ. SWITCH
4. FINAL TENS REGISTRATION

RELAY OPERATION "B" SENDER

"T-" KEY	LEAD "A"	LEAD "B"	LEAD "C"
9		FT1 FT3	FT4 A
8	FT2	FT1 FT3	FT4 A
7	FT2		FT4 A
6	FT2	FT3	FT4 A
5			FT4 A
4		FT1 FT3	A
3	FT2	FT1 FT3	A
2	FT2		A
1	FT2	FT3	A
0			A

ST-51029-04 ISS.17 KEY CONTROL "B" SENDER
SD-21802-011 ISS.4D KEY CONTROL
ES-20033-01 " 10D "B" SENDER

TENS REGISTRATION — PDB CDLS

PANEL GCO — OS-181 C.12

ILL. BELL TEL. CO - PLANT SCHOOL

ISSUE	DATE	BY
1	9-54	GHH

KEY SET AND KEY CONTROL CKT

"B" SENDER

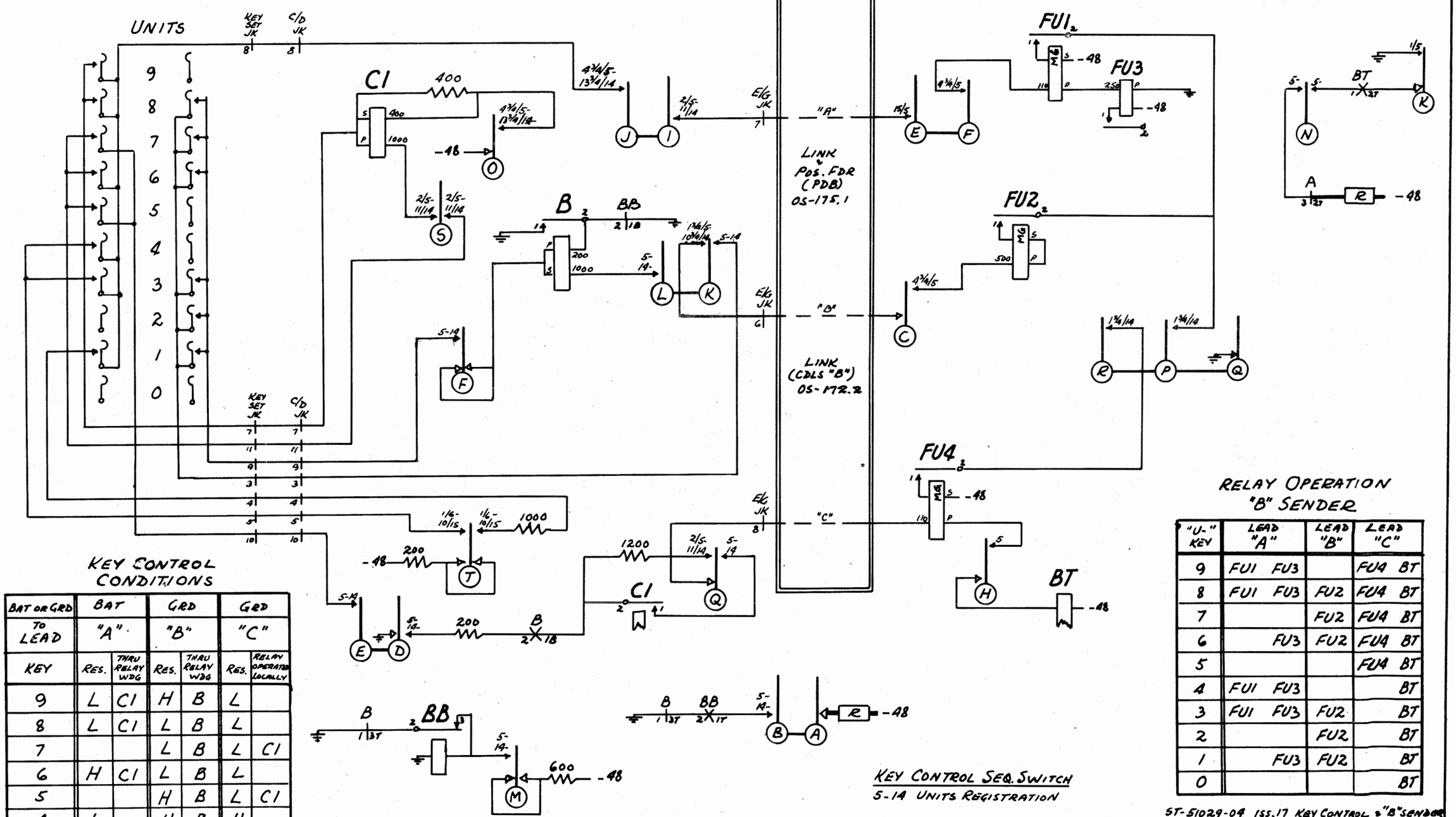

KEY CONTROL CONDITIONS

BAT OR GRD TO LEAD	BAT "A"		GRD "B"		GRD "C"	
KEY	RES.	THRU RELAY WDG	RES.	THRU RELAY WDG	RES.	RELAY OPERATED LOCALLY
9	L	C1	H	B	L	
8	L	C1	L	B	L	
7			L	B	L	C1
6	H	C1	L	B	L	
5			H	B	L	C1
4	L		H	B	H	
3	L		L	B	H	
2			L	B	H	
1	H		L	B	H	
0			H	B	H	

H = 1200ω (OR 1400ω)
L = 200ω
BLANK = OPEN CKT

RELAY OPERATION "B" SENDER

"U-" KEY	LEAD "A"		LEAD "B"	LEAD "C"	
9	FU1	FU3		FU4	BT
8	FU1	FU3	FU2	FU4	BT
7			FU2	FU4	BT
6		FU3	FU2	FU4	BT
5				FU4	BT
4	FU1	FU3			BT
3	FU1	FU3	FU2		BT
2			FU2		BT
1		FU3	FU2		BT
0					BT

ST-51029-04 ISS.17 KEY CONTROL & "B" SENDER
SD-21802-011 ISS.4D KEY CONTROL
ES-20033-01 ISS.10D "B" SENDER

ISSUE	1	
DATE	9-54	
BY	GHH	

UNITS REGISTRATION

PDB
CDLS

PANEL GCO

OS-181D.1,2

ILL. BELL TEL. CO — PLANT SCHOOL

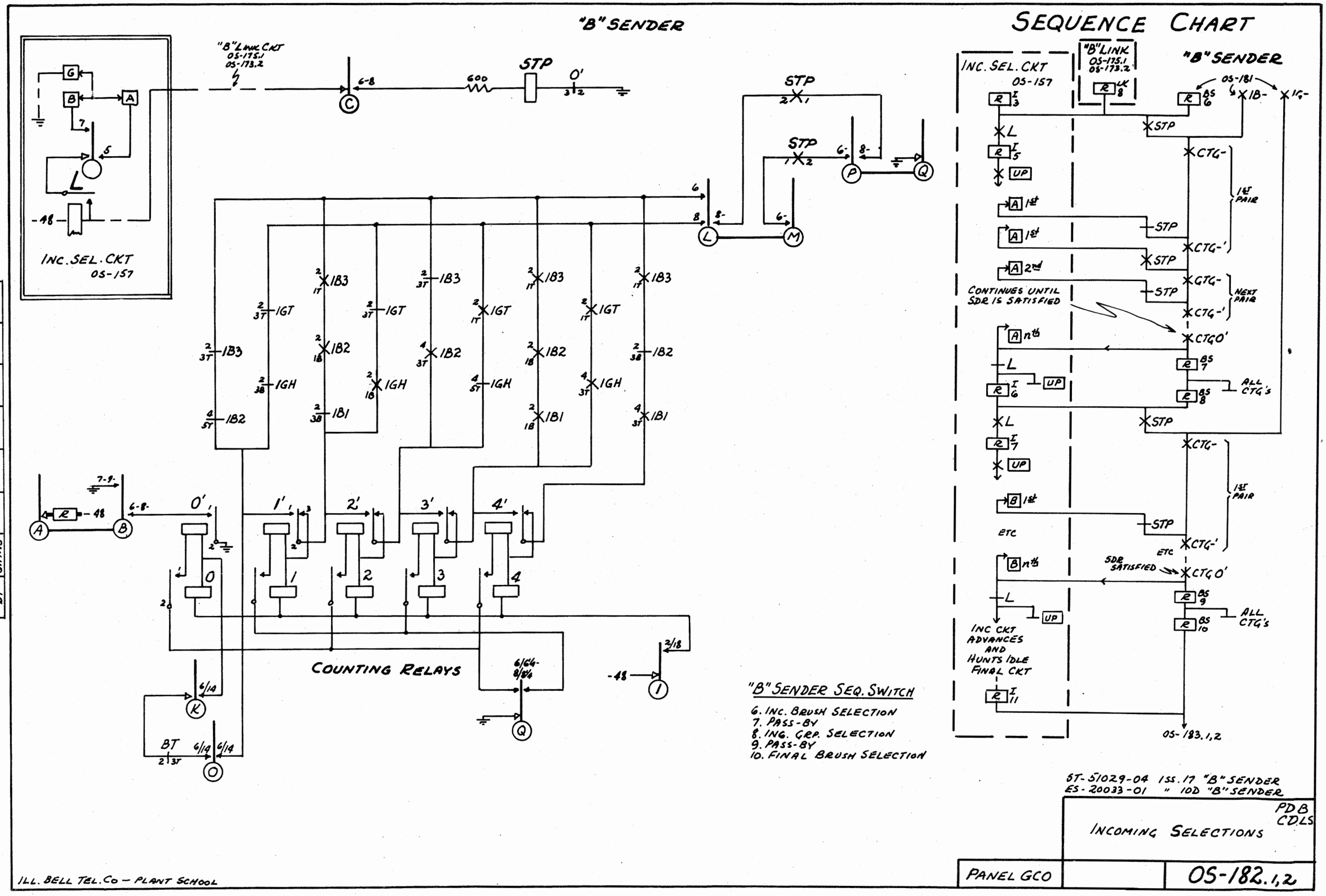
"B" SENDER
SEQUENCE CHART
INC. SEL. CKT
OS-157
"B" LINK CKT
OS-175.1
OS-173.2
STP
600
-48
COUNTING RELAYS
"B" SENDER SEQ. SWITCH
6. INC. BRUSH SELECTION
7. PASS-BY
8. ING. GRP. SELECTION
9. PASS-BY
10. FINAL BRUSH SELECTION
"B" LINK
OS-175.1
OS-173.2
"B" SENDER
OS-181
1ST PAIR
NEXT PAIR
CONTINUES UNTIL SDR IS SATISFIED
ALL CTG's
ETC
SDR SATISFIED
INC CKT ADVANCES AND HUNTS IDLE FINAL CKT
OS-183.1,2
ST-51029-04 ISS. 17 "B" SENDER
ES-20033-01 " 10D "B" SENDER
PDB
CDLS
INCOMING SELECTIONS
PANEL GCO
OS-182.1,2
ILL. BELL TEL. CO — PLANT SCHOOL
ISSUE 1
DATE 9-54
BY GHNS

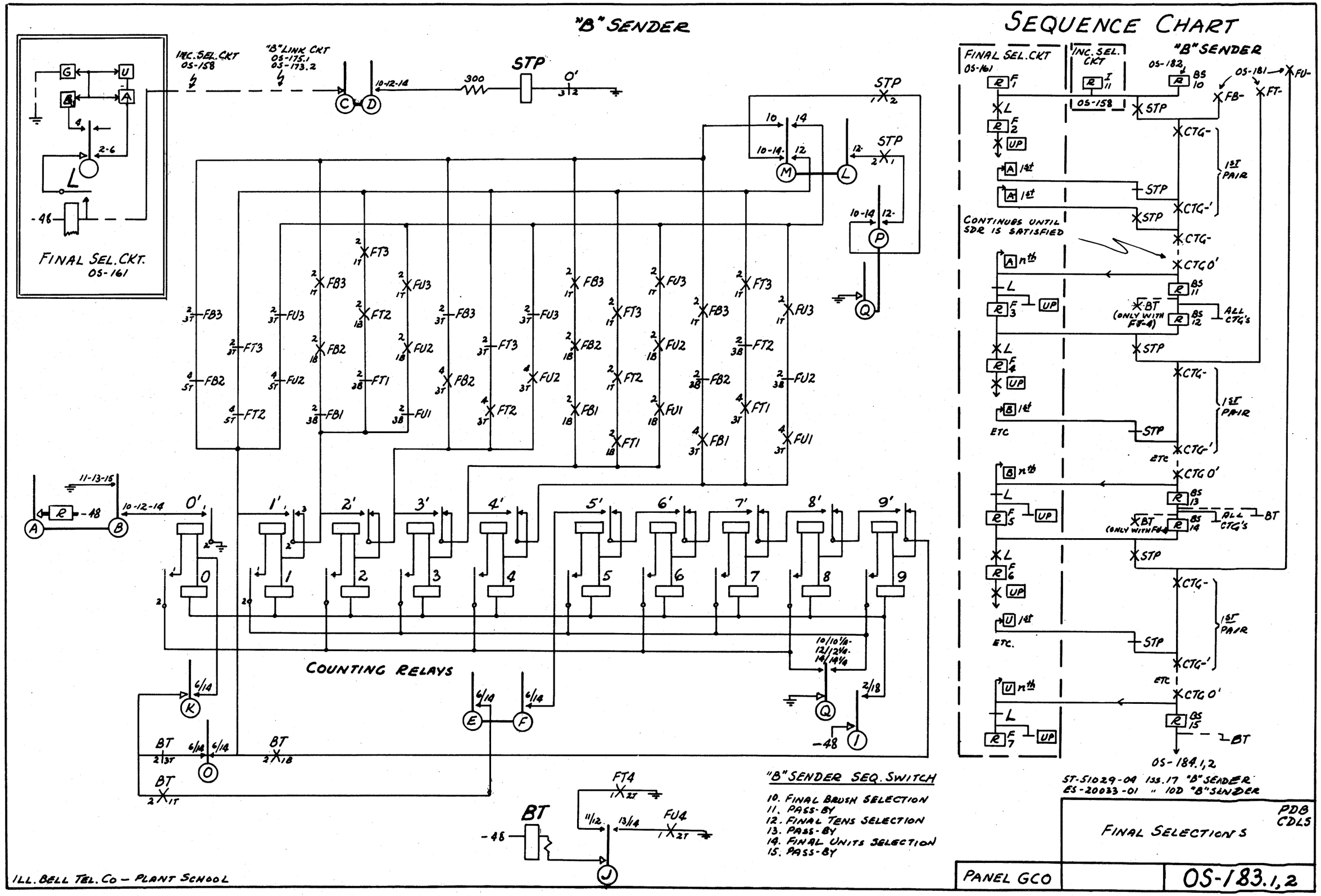
"B" SENDER
SEQUENCE CHART
FINAL SEL. CKT. OS-161
INC. SEL. CKT OS-158
"B" LINK CKT OS-175.1 OS-173.2
STP
COUNTING RELAYS
"B" SENDER SEQ. SWITCH
10. FINAL BRUSH SELECTION
11. PASS-BY
12. FINAL TENS SELECTION
13. PASS-BY
14. FINAL UNITS SELECTION
15. PASS-BY
FINAL SEL. CKT OS-161
INC. SEL. CKT
"B" SENDER
CONTINUES UNTIL SDR IS SATISFIED
1ST PAIR
ALL CTG's
ETC
OS-184.1,2
ST-51029-04 133.17 "B" SENDER
ES-20023-01 " 10D "B" SENDER
FINAL SELECTIONS
PDB
CDLS
PANEL GCO
OS-183.1,2
ILL. BELL TEL. CO — PLANT SCHOOL

SEQUENCE CHART

"B" SENDER

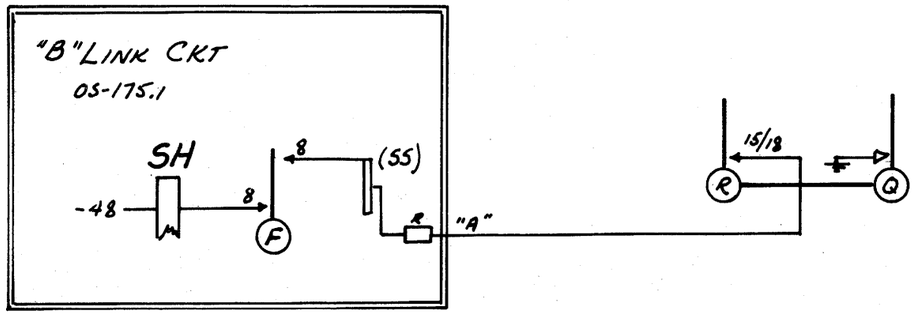

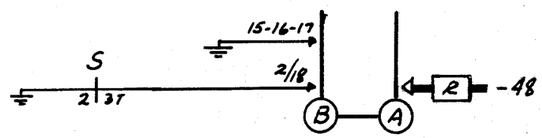

(A) POS. DISTR. "B"

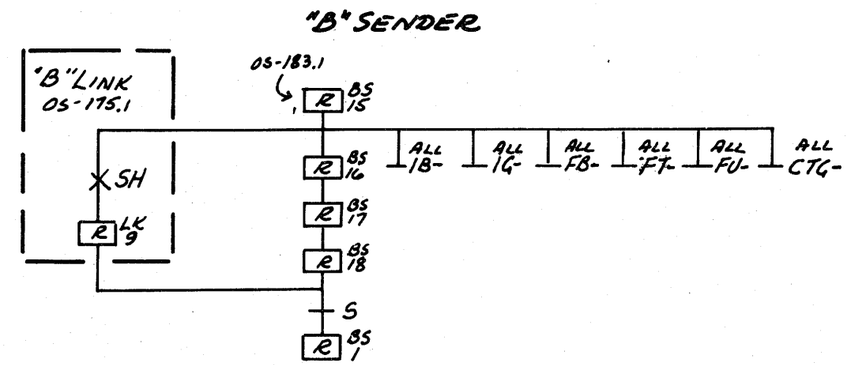

"B" SENDER SEQ. SWITCH
15. PASS-BY
16. " "
17. " "
18. AWTG. SDR. SELECTOR

"B" SENDER

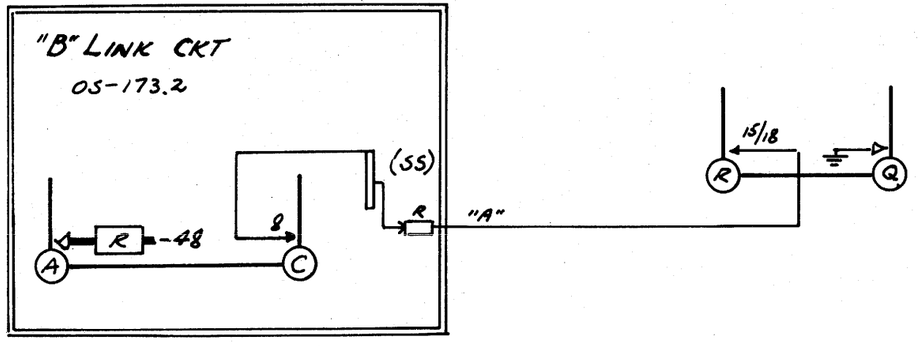

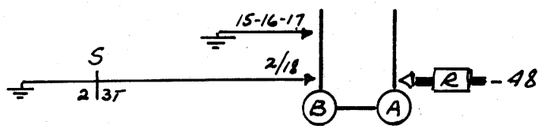

(B) CORDLESS "B"

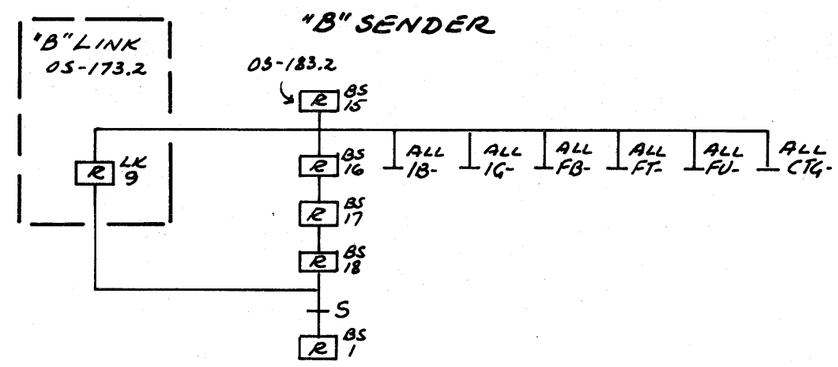

ISSUE	DATE	BY
1	9-54	GH/NS

ES- 20033 - 01 ISS 10D "B" SENDER
ST- 51029 - 04 ISS. 17 "B" SENDER

"B" SENDER RELEASE

PDB
CDLS

PANEL GCO

OS-184.1,2

ILL. BELL TEL. CO - PLANT SCHOOL

SEQUENCE CHART

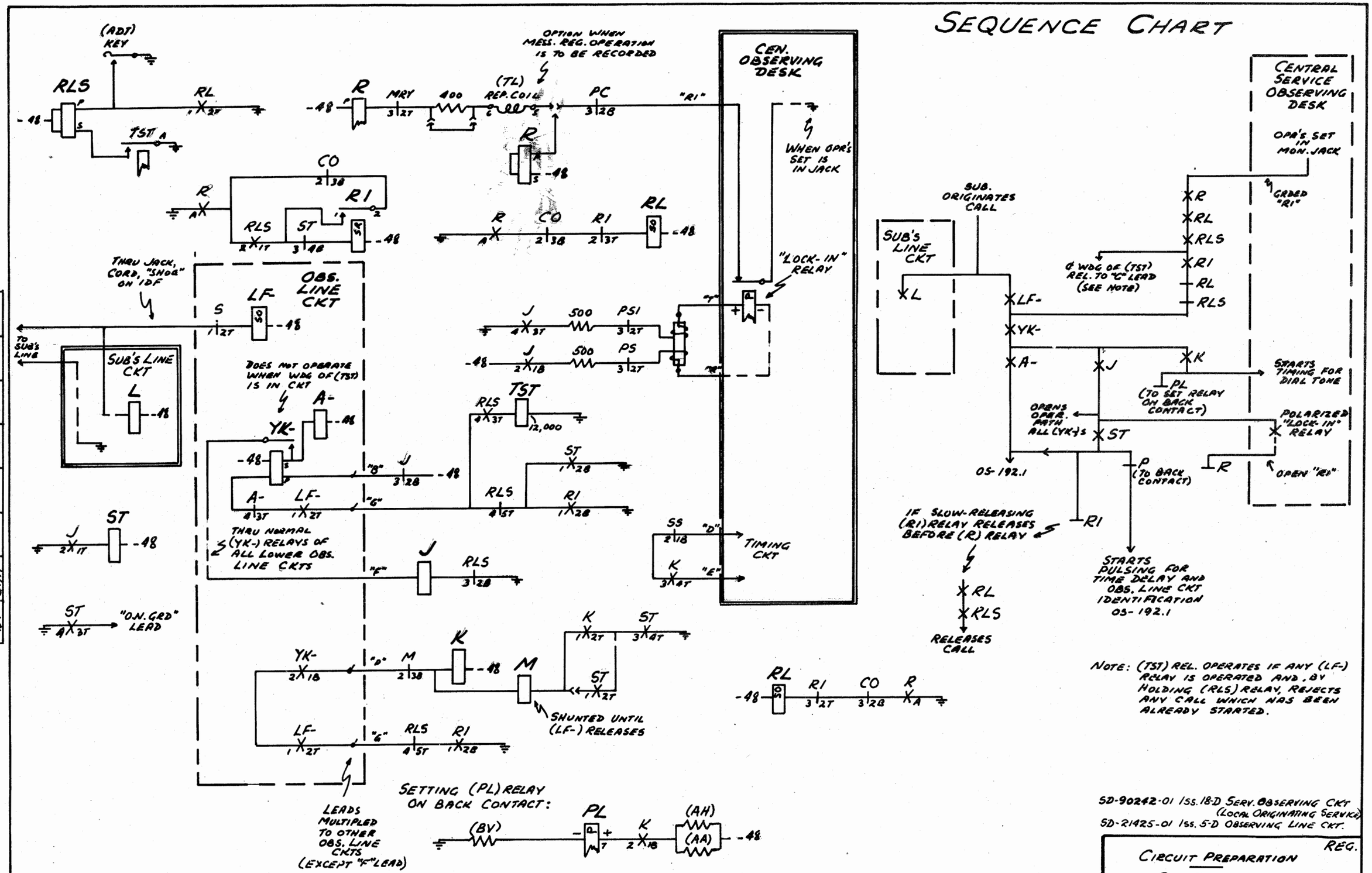

NOTE: (TST) REL. OPERATES IF ANY (LF-) RELAY IS OPERATED AND, BY HOLDING (RLS) RELAY, REJECTS ANY CALL WHICH HAS BEEN ALREADY STARTED.

SD-90242-01 Iss. 18-D Serv. Observing Ckt (Local Originating Service)
SD-21425-01 Iss. 5-D Observing Line Ckt.

ISSUE	1	
DATE	1-55	
BY	GHH	

REG.

CIRCUIT PREPARATION
CALL ORIGINATED

PANEL GCO

OS-191.1

ILL. BELL TEL. CO. – PLANT SCHOOL

SEQUENCE CHART

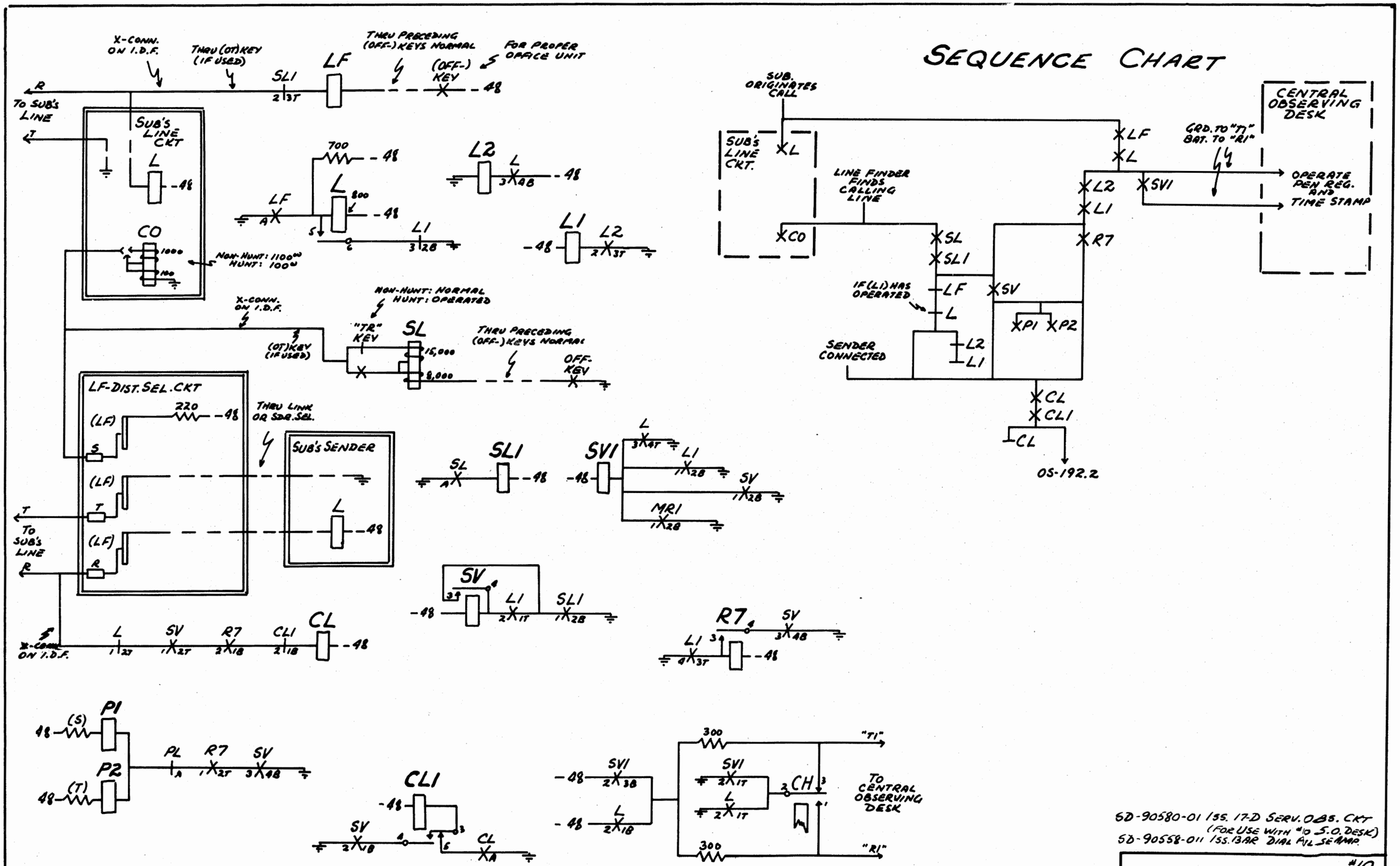

SD-90580-01 ISS. 17-D SERV. OBS. CKT (FOR USE WITH #10 S.O. DESK)
SD-90558-011 ISS. 13AR DIAL A/L SEMAP.

#10

OUTGOING CALL ORIGINATED

PANEL GCO | OS-191.2

ILL. BELL TEL. CO — PLANT SCHOOL

SEQUENCE CHART

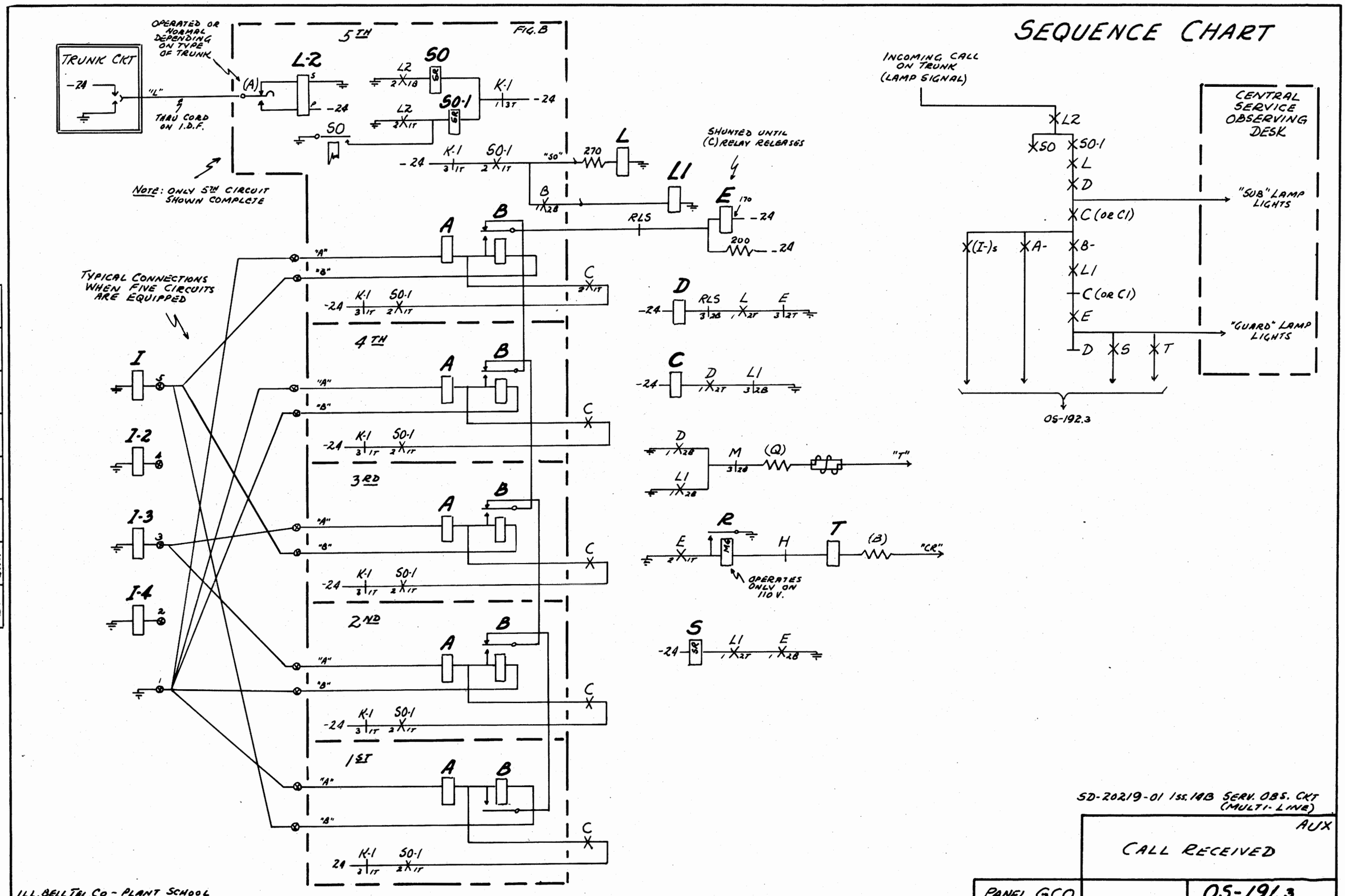

SD-20219-01 Iss. 1AB SERV. OBS. CKT (MULTI-LINE)

AUX

CALL RECEIVED

PANEL GCO

OS-191.3

ILL. BELL TEL. CO - PLANT SCHOOL

SEQUENCE CHART

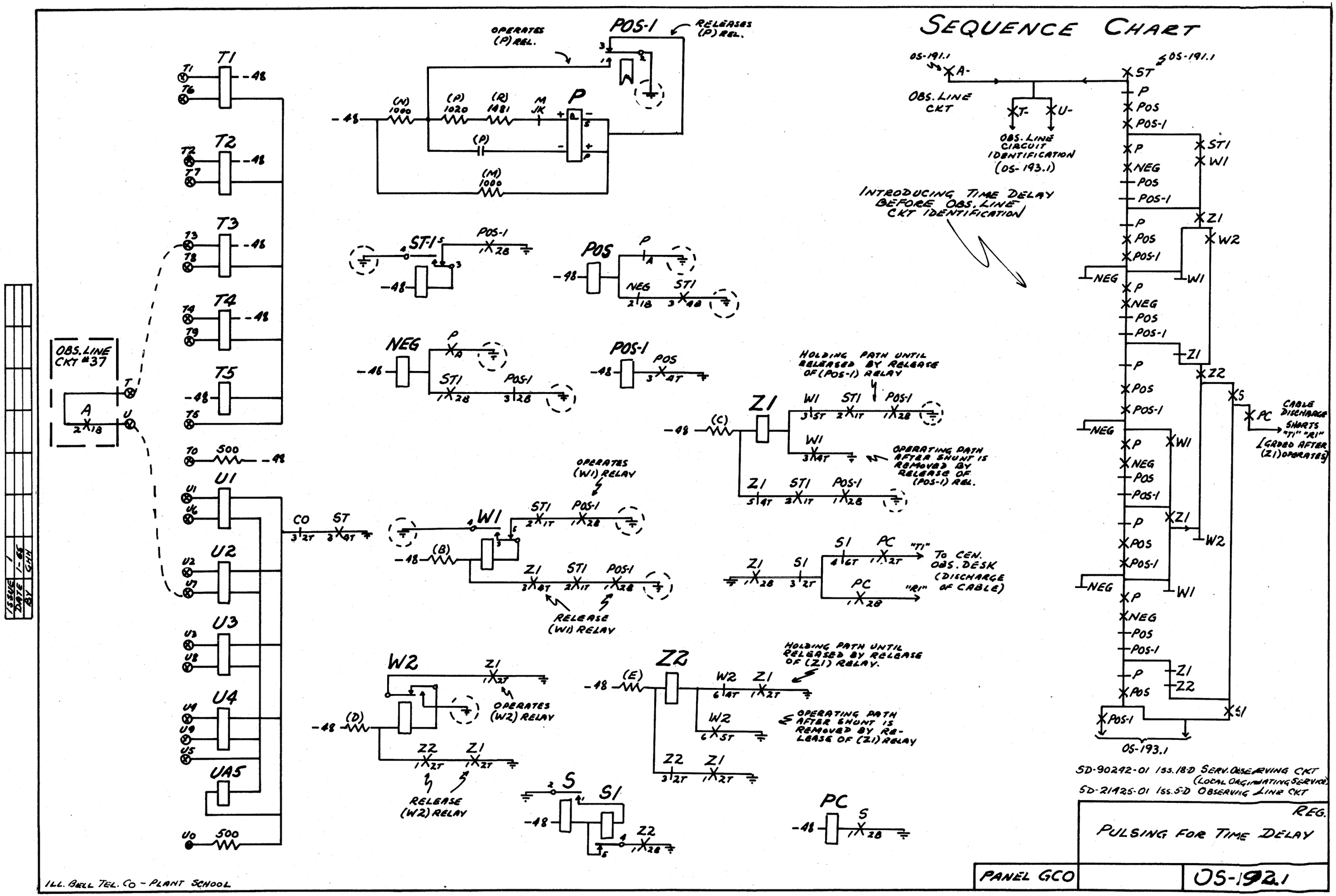

SEQUENCE CHART

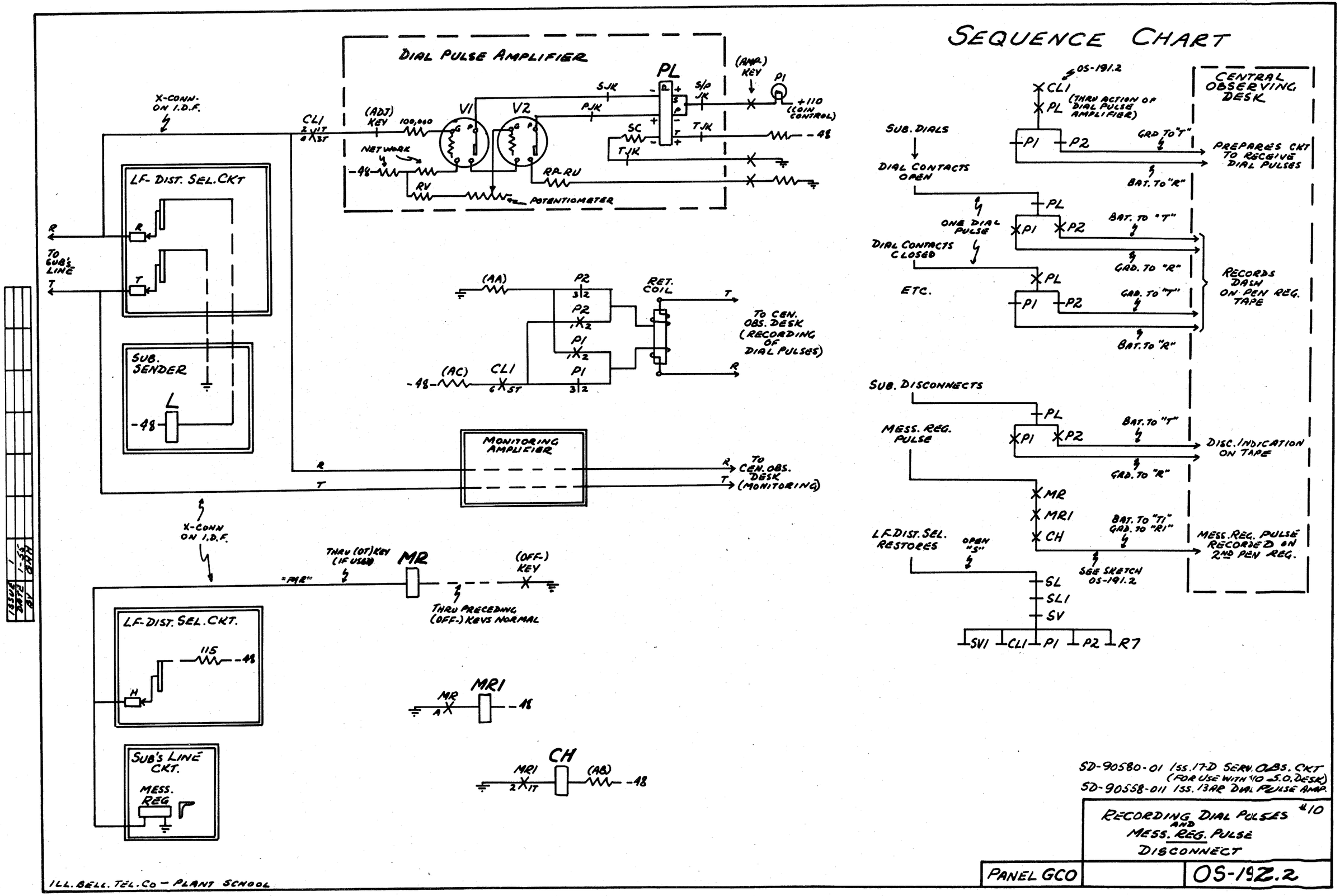

SEQUENCE CHART

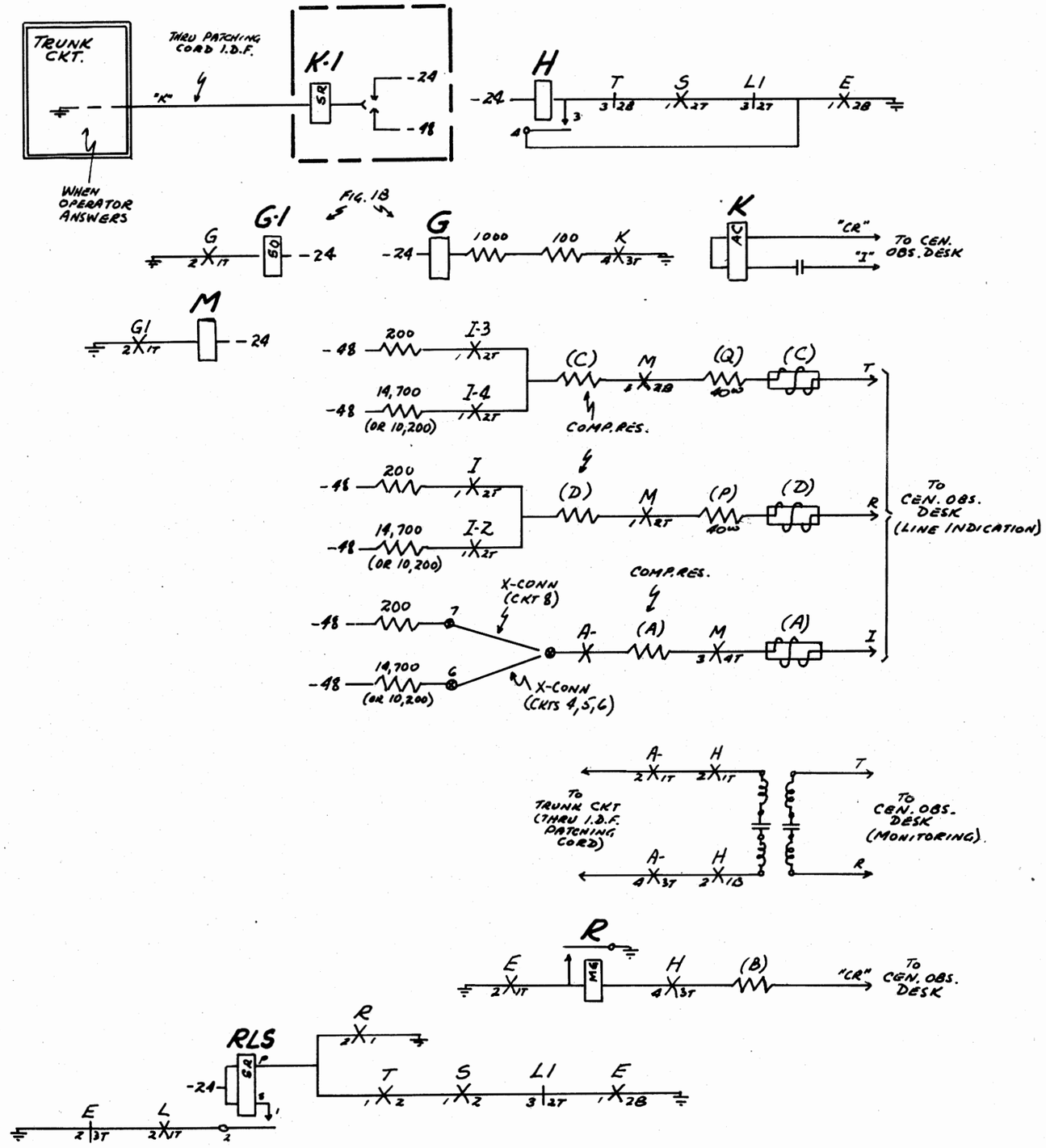

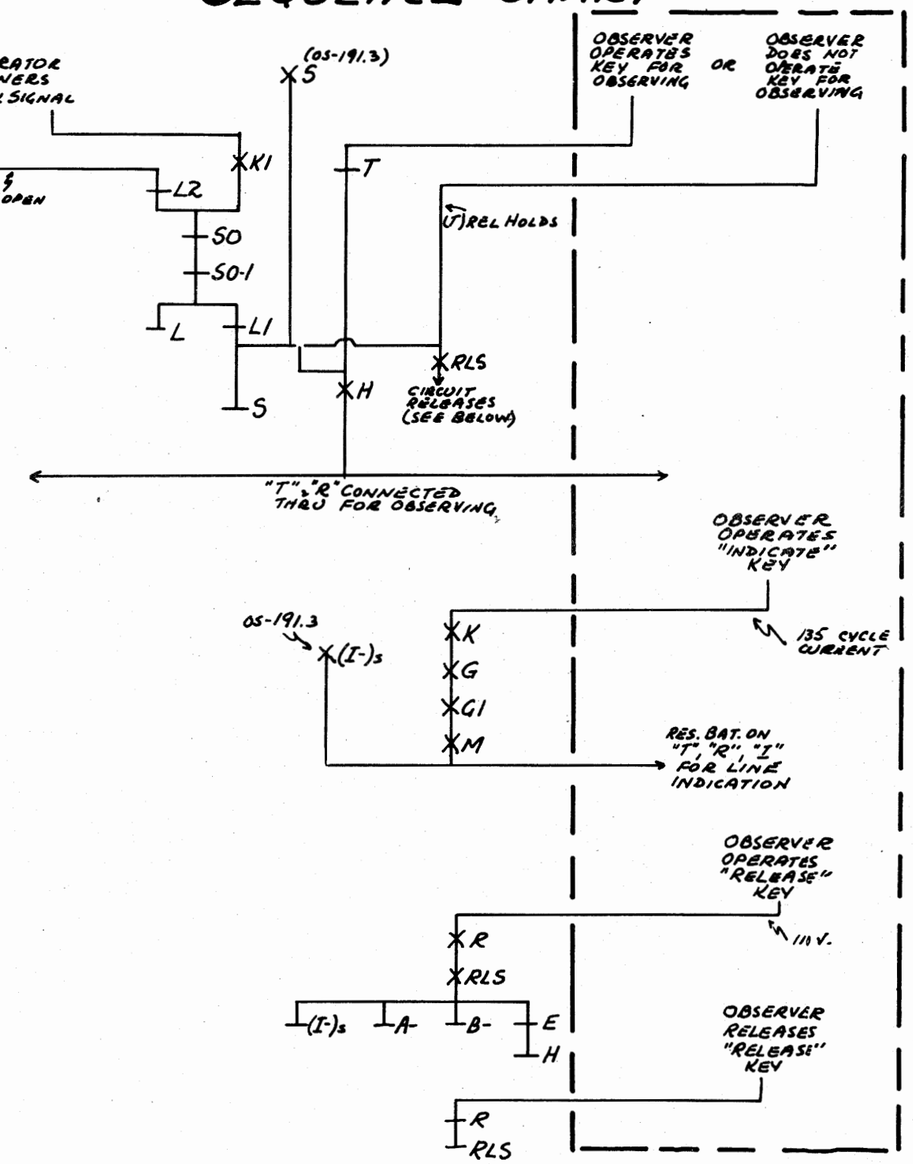

ISSUE	1	
DATE	1-55	
BY	GHH	

SD-20219-01 Iss. 14B SERV. OBS. CKT (MULTI-LINE)

AUX

MONITORING
LINE INDICATION
RELEASE

PANEL GCO

OS-192.3

ILL. BELL TEL. CO - PLANT SCHOOL

SEQUENCE CHART

(W-)(Z-) RELAY OPERATION

	PULSE			
TENS	1ST	2ND	3RD	4TH
	NONE	W1	W1 Z1 W2	Z1 W2
	PULSE			
UNITS	5TH	6TH	7TH	8TH
	W2 Z2	W1 W2 Z2	W1 Z1 Z2	Z1 Z2

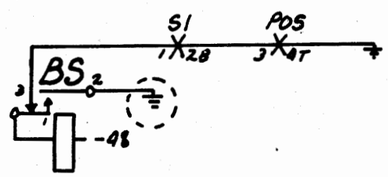

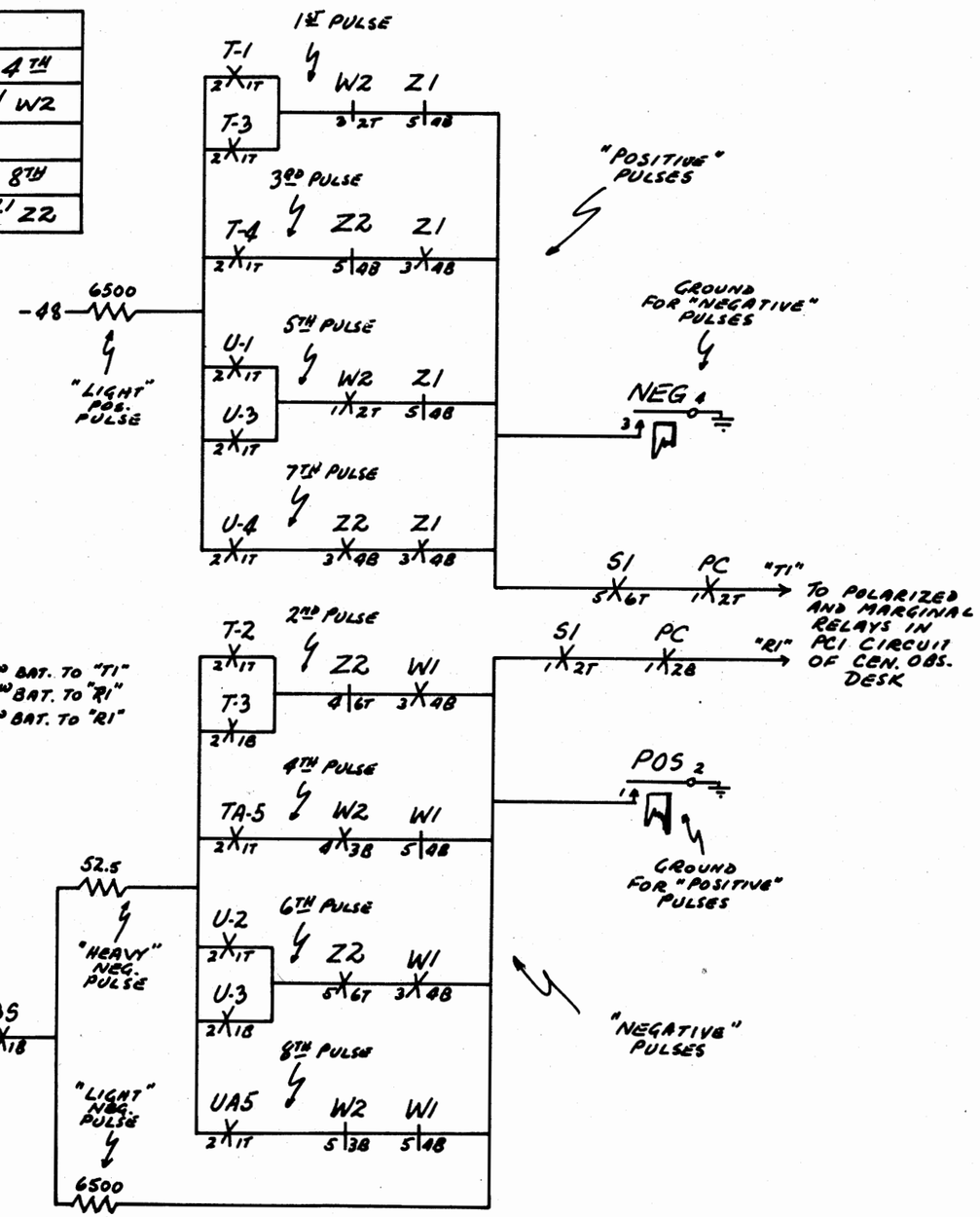

DIGIT	PULSE CHART			
0		—		—
1	+	—		—
2		▬		—
3	+	▬		—
4		—	+	—
5		—		▬
6	+	—		▬
7		▬		▬
8	+	▬		▬
9		—	+	▬

+ 6500 BAT. TO "T1"
▬ 52.5 BAT. TO "R1"
— 6500 BAT. TO "R1"

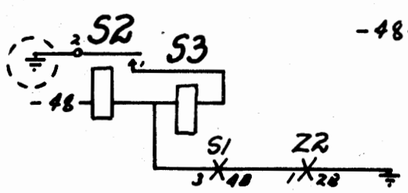

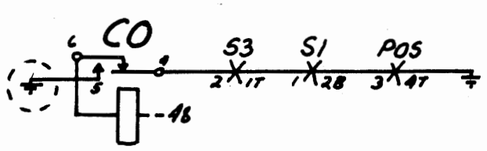

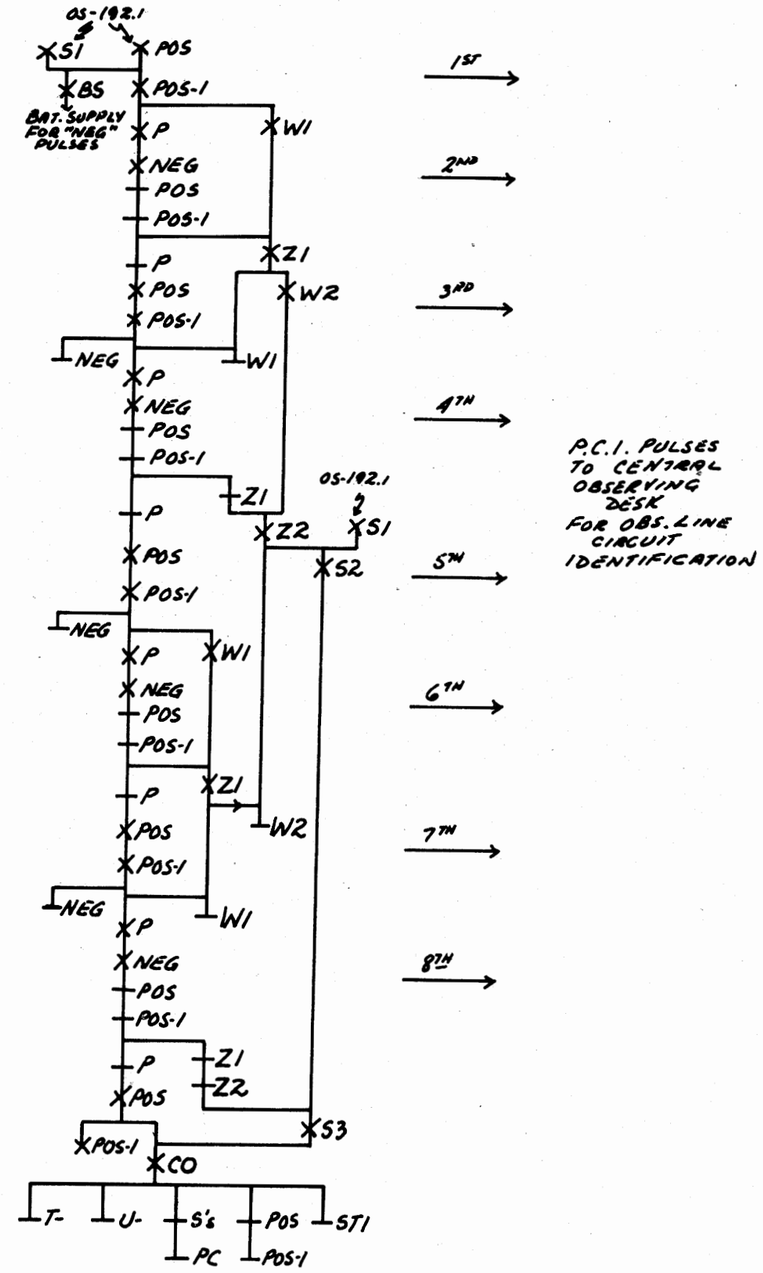

SEE OS-192.1 FOR (W-) AND (Z-) RELAY OPERATIONAL SKETCHES

SD-90242-01 ISS. 1&D SERV. OBS. CKT (LOCAL ORIG. SERVICE)
SD-21425-01 ISS. 5-D OBSERVING LINE CKT

ISSUE	1
DATE	1-55
BY	GHH

PC1 PULSING FOR OBSERVING LINE CKT IDENTIFICATION

REG.

PANEL GCO

OS-193.1

ILL. BELL TEL. CO - PLANT SCHOOL

SEQUENCE CHART

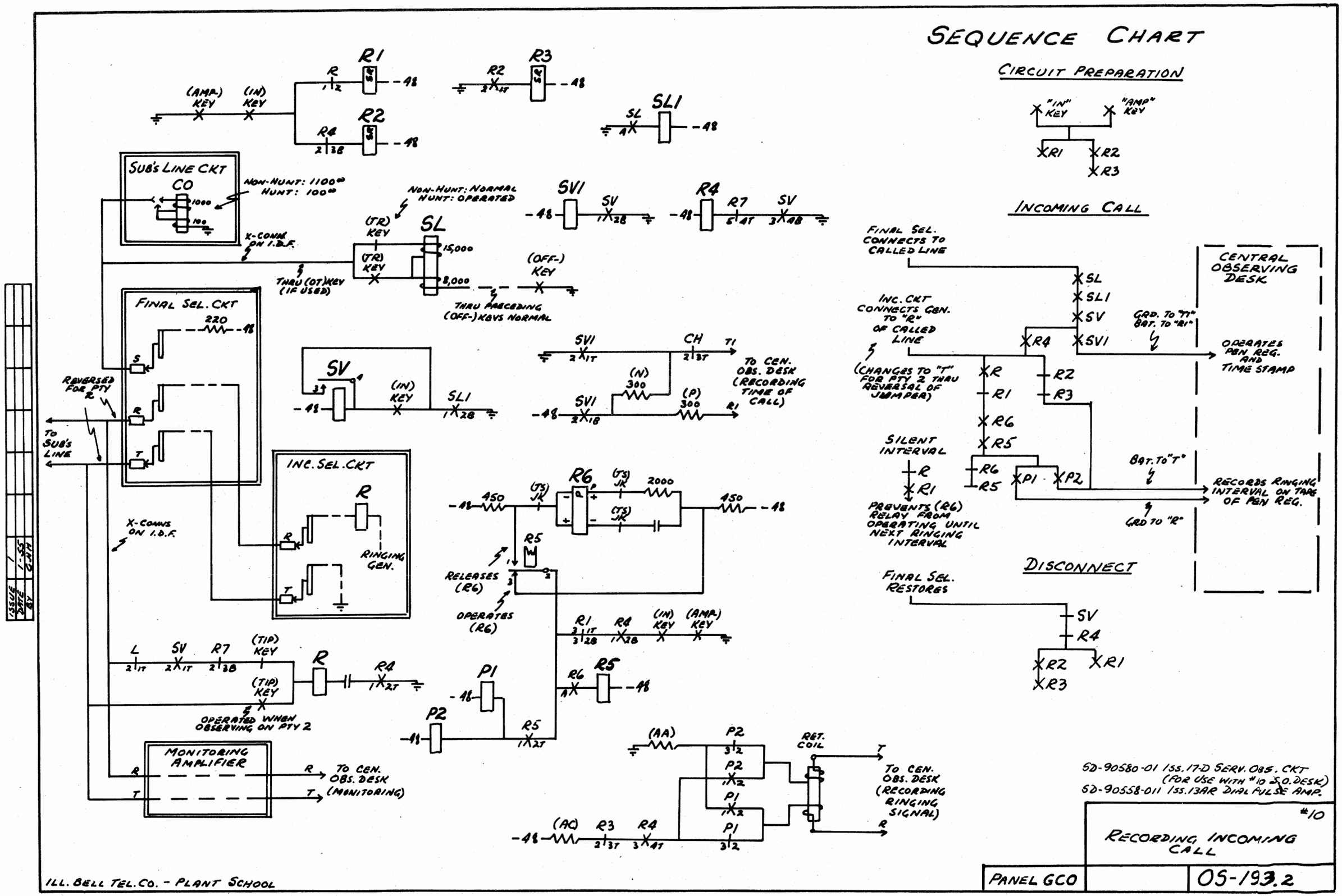

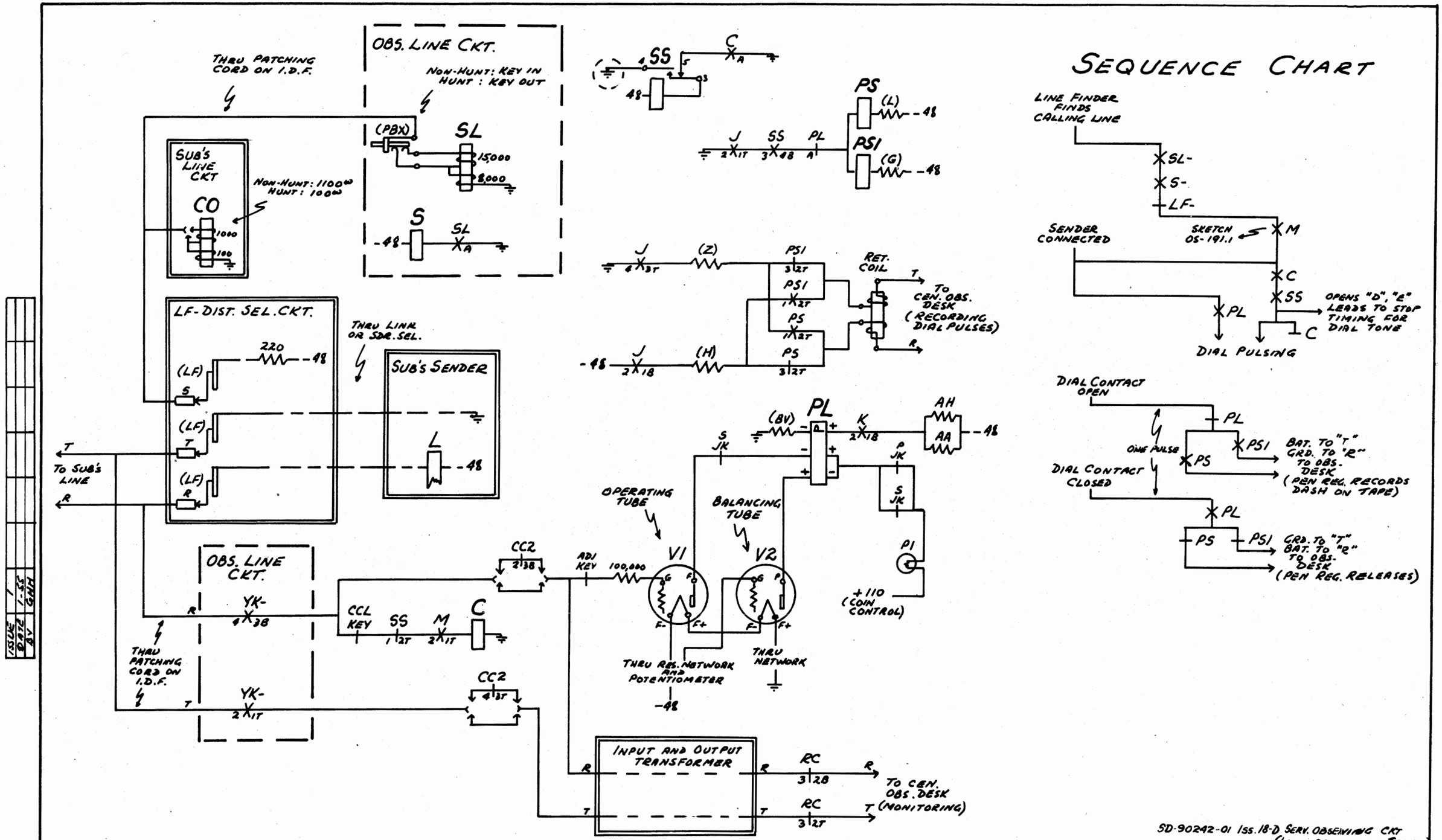

SD-90242-01 Iss. 18-D SERV. OBSERVING CKT (LOCAL ORIGINATING SERVICE)
SD-21425-01 Iss. 5-D OBSERVING LINE CKT

REG.

RECORDING DIAL PULSES
MONITORING

PANEL GCO | OS-194.1

ISSUE 1 | DATE 1-55 | BY GHH

ILL. BELL TEL. CO — PLANT SCHOOL

SEQUENCE CHART

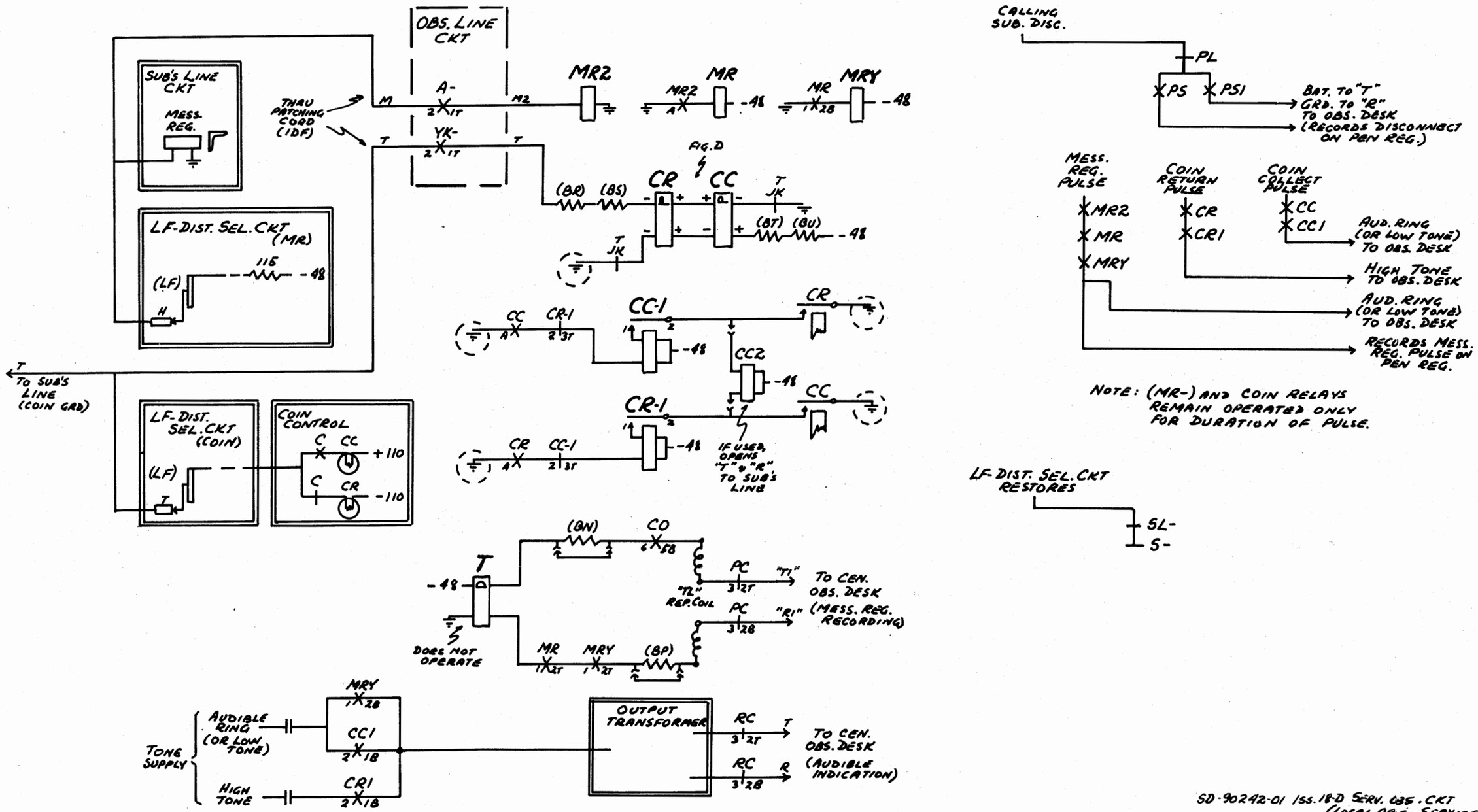

ISSUE	1
DATE	1-55
BY	GHM

SD-90242-01 Iss. 18-D Serv. Obs. Ckt (Local Orig. Service)
SD-21425-01 Iss. 5-D Observing Line Ckt

SUBSCRIBER DISCONNECT REG.
MESSAGE REGISTRATION OR COIN DISPOSAL INDICATION

PANEL GCO | OS-195.1

ILL. BELL TEL. CO - PLANT SCHOOL

SEQUENCE CHART

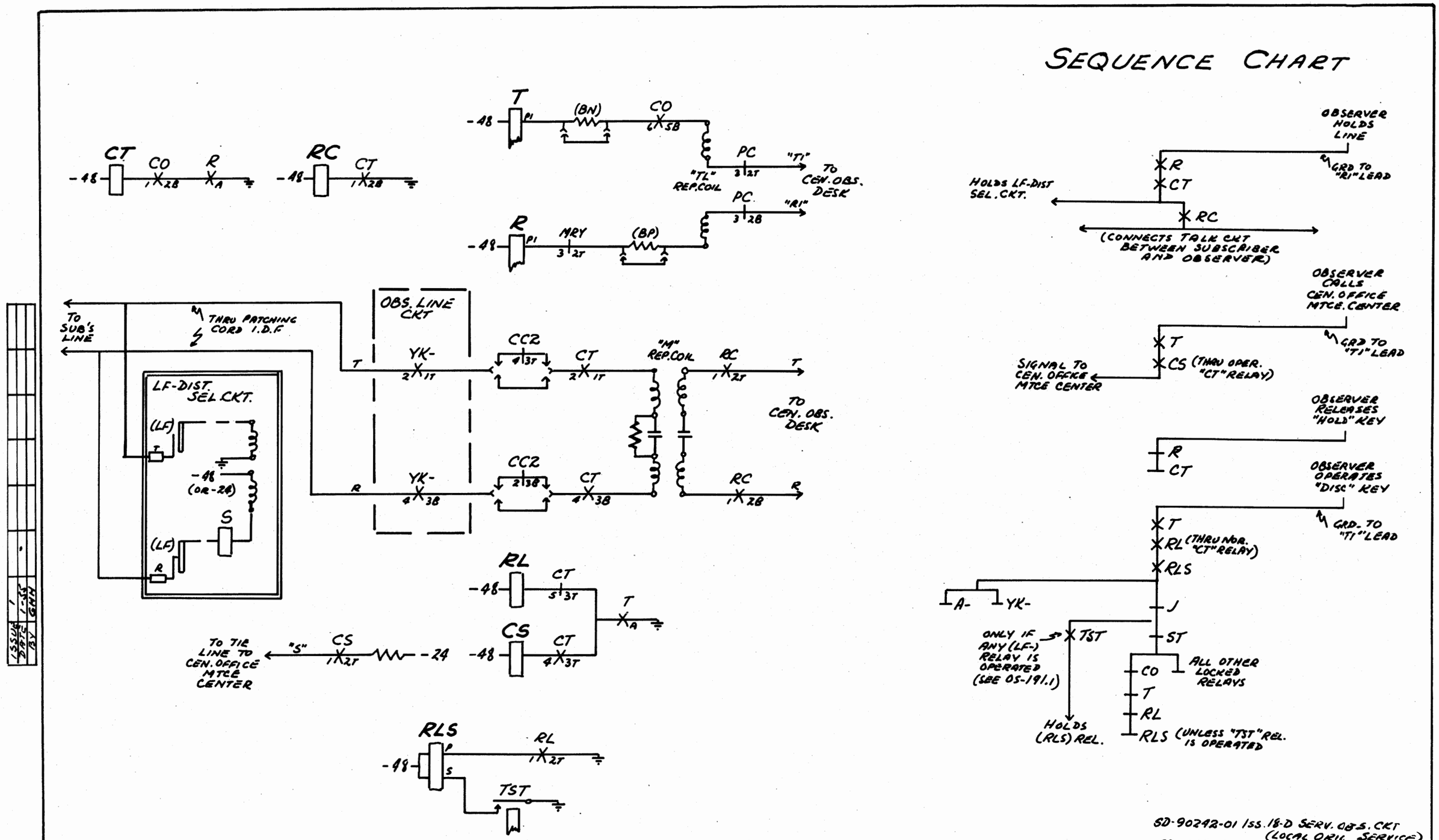

SD-90242-01 Iss. 18-D SERV. OBS. CKT (LOCAL ORIG. SERVICE)
SD-21425-01 Iss. 5D OBSERVING LINE CKT

REG.

HOLDING FEATURE AND OBSERVER DISCONNECT

PANEL GCO

OS-196.1

ILL. BELL TEL. CO - PLANT SCHOOL

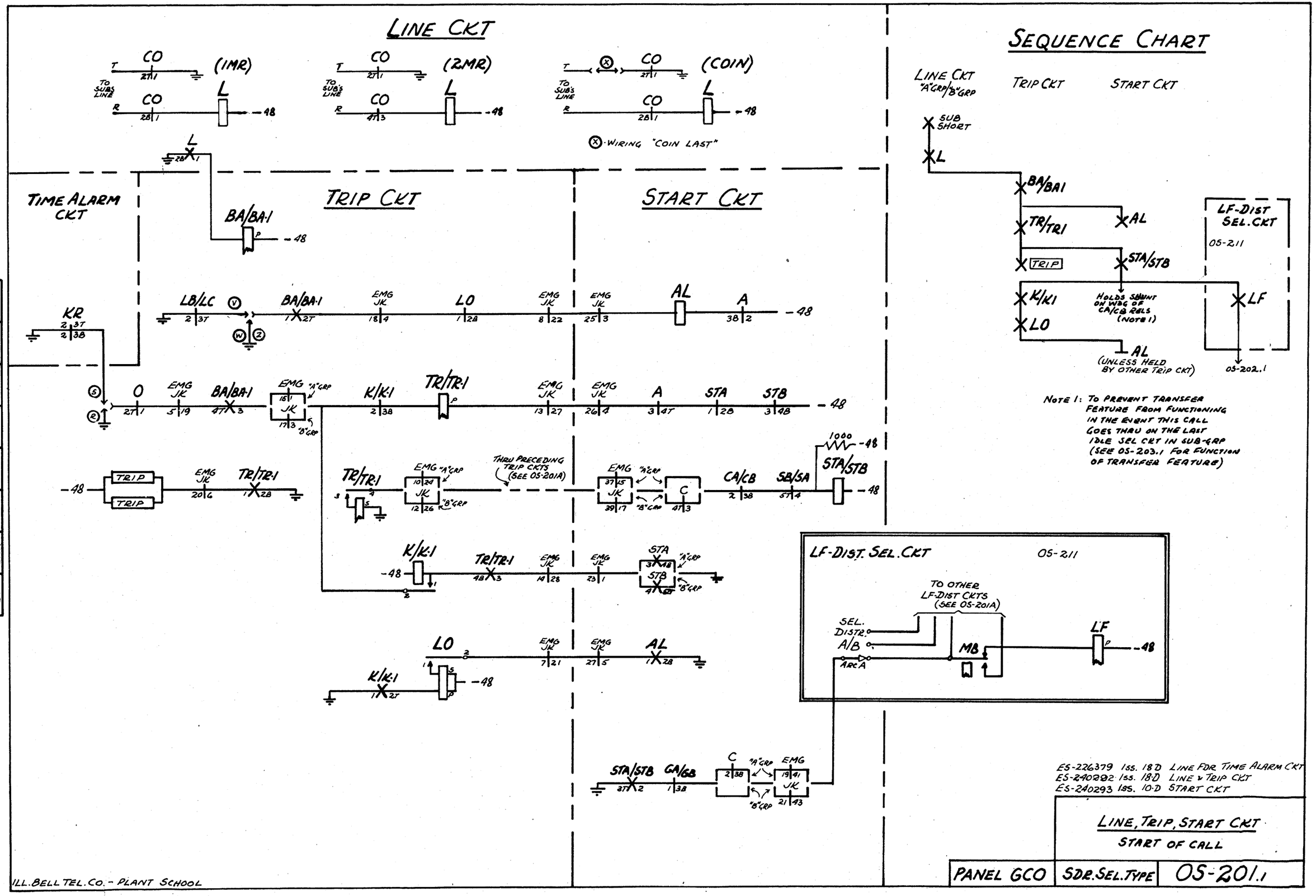
LINE CKT
CO (1MR) L
CO (2MR) L
CO (COIN) L
TO SUB'S LINE
-48
⊗ WIRING "COIN LAST"
TIME ALARM CKT
TRIP CKT
START CKT
BA/BA-1
KR
LB/LC
LO
EMG JK
AL
A
O
K/K-1
TR/TR-1
STA
STB
TRIP
THRU PRECEDING TRIP CKTS (SEE OS-201A)
C
CA/CB
SB/SA
1000
LF-DIST. SEL. CKT
OS-211
TO OTHER LF-DIST CKTS (SEE OS-201A)
SEL. DISTR. A/B
ARC A
MB
LF
SEQUENCE CHART
LINE CKT "A"GRP/"B"GRP
TRIP CKT
START CKT
SUB SHORT
HOLDS SHUNT ON WBG OF CA/CB RELS (NOTE 1)
(UNLESS HELD BY OTHER TRIP CKT)
05-202.1
NOTE 1: TO PREVENT TRANSFER FEATURE FROM FUNCTIONING IN THE EVENT THIS CALL GOES THRU ON THE LAST IDLE SEL CKT IN SUB-GRP (SEE OS-203.1 FOR FUNCTION OF TRANSFER FEATURE)
ES-226379 Iss. 18D LINE FOR TIME ALARM CKT
ES-240292 Iss. 18D LINE & TRIP CKT
ES-240293 Iss. 10D START CKT
LINE, TRIP, START CKT
START OF CALL
PANEL GCO
SDR. SEL. TYPE
OS-201.1
ISSUE 1
DATE 6-54
BY GHH
ILL. BELL TEL. CO. - PLANT SCHOOL

TRIP CKT PREFERENCE AND LOCK-OUT

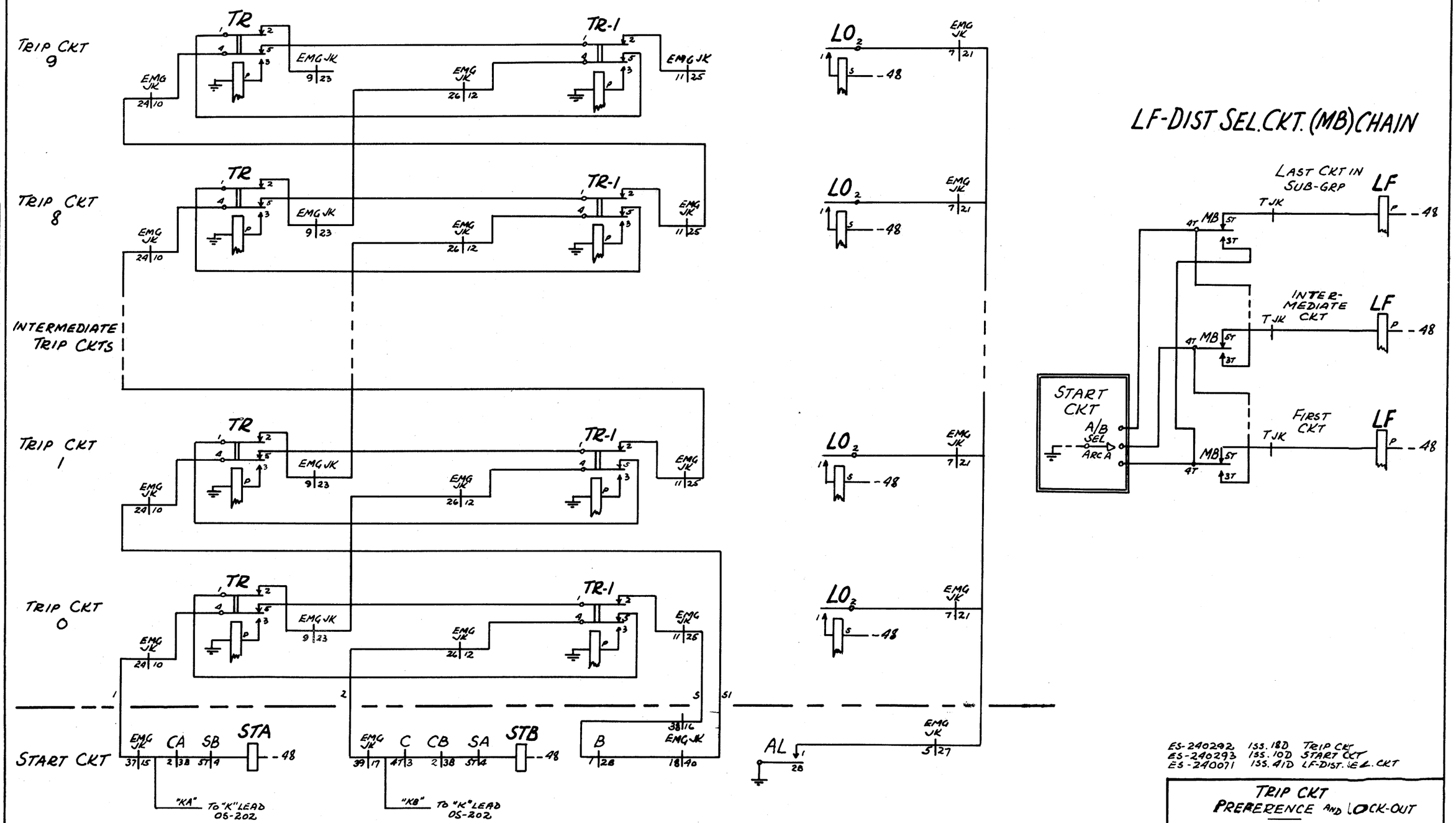

SEQUENCE CHART

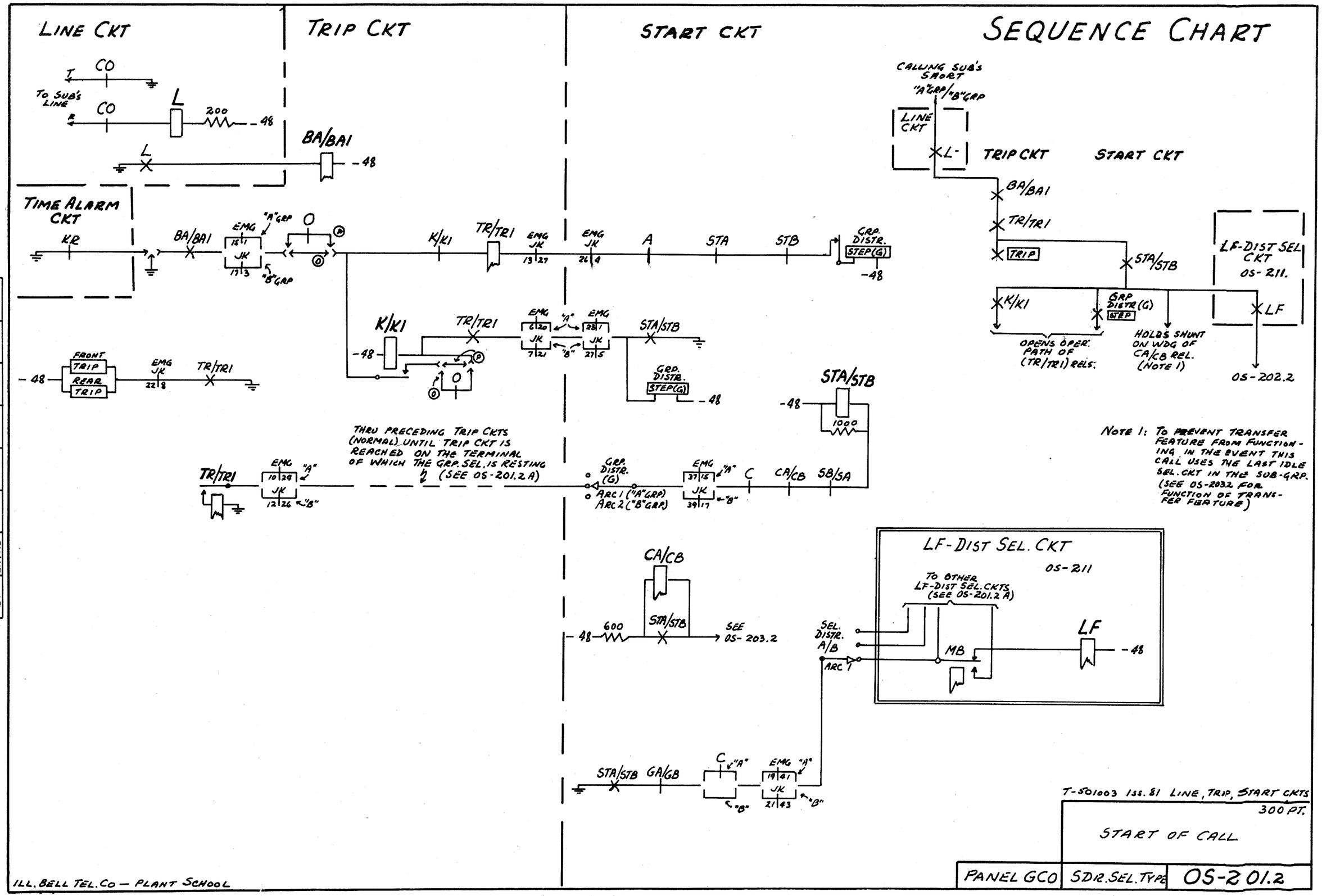

ISSUE	1
DATE	8-54
BY	GH/NS

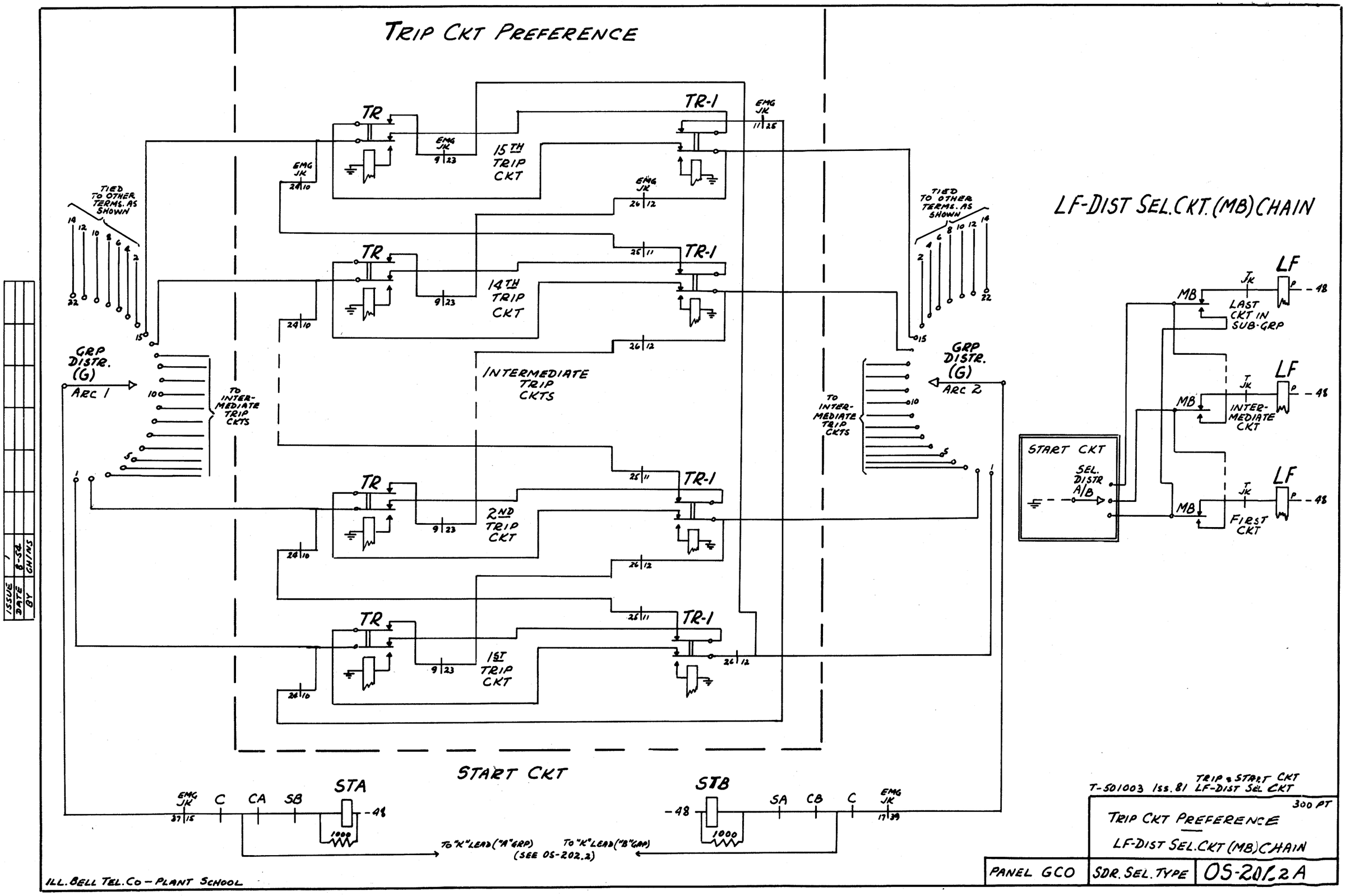
TRIP CKT PREFERENCE
TR
TR-1
EMG JK
15TH TRIP CKT
14TH TRIP CKT
2ND TRIP CKT
1ST TRIP CKT
TIED TO OTHER TERMS. AS SHOWN
GRP DISTR. (G)
ARC 1
ARC 2
TO INTER-MEDIATE TRIP CKTS
INTERMEDIATE TRIP CKTS
START CKT
STA
STB
C
CA
SB
SA
CB
-48
1000
TO "K" LEAD ("A" GRP)
TO "K" LEAD ("B" GRP)
(SEE OS-202.2)
LF-DIST SEL. CKT. (MB) CHAIN
LF
MB
JK
LAST CKT IN SUB-GRP
INTER-MEDIATE CKT
FIRST CKT
SEL. DISTR A/B
ISSUE 1
DATE 8-58
BY SMHS
T-501003 Iss. 81
TRIP & START CKT
LF-DIST SEL CKT
300 PT
TRIP CKT PREFERENCE
LF-DIST SEL. CKT (MB) CHAIN
PANEL GCO
SDR. SEL. TYPE
OS-201.2A
ILL. BELL TEL. CO – PLANT SCHOOL

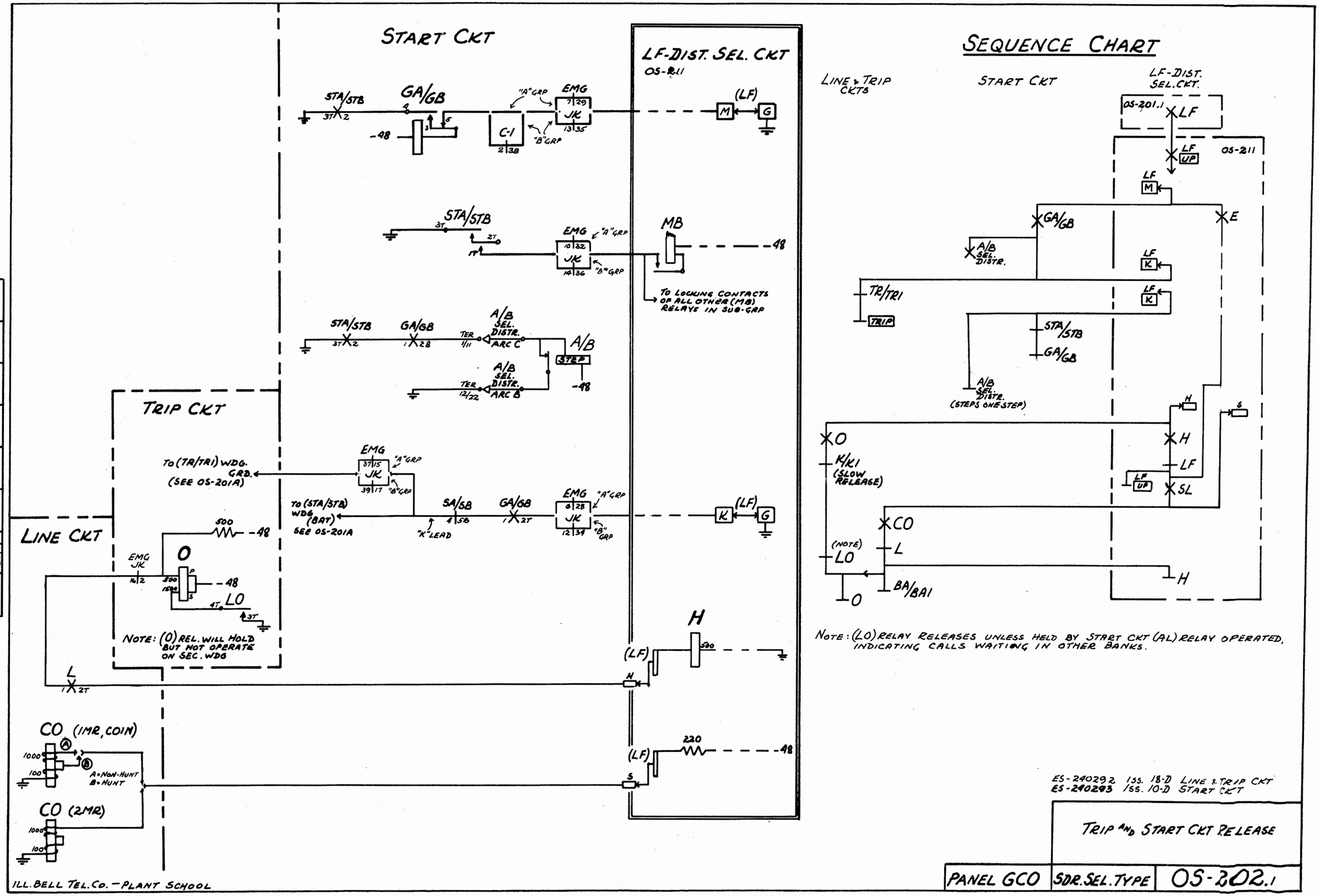
START CKT
LF-DIST. SEL. CKT
OS-211
STA/STB
GA/GB
"A" GRP
EMG
JK
C-1
"B" GRP
-48
(LF)
M
G
MB
TO LOCKING CONTACTS OF ALL OTHER (MB) RELAYS IN SUB-GRP
A/B SEL. DISTR. ARC C
A/B SEL. DISTR. ARC B
A/B
STEP
TRIP CKT
TO (TR/TRI) WDG. GRD. (SEE OS-201A)
TO (STA/STB) WDG (BAT) SEE OS-201A
SA/SB
"K" LEAD
K
500
O
LO
NOTE: (O) REL. WILL HOLD BUT NOT OPERATE ON SEC. WDG
LINE CKT
H
220
CO (1MR, COIN)
A=NON-HUNT
B=HUNT
CO (2MR)
SEQUENCE CHART
LINE & TRIP CKTS
START CKT
LF-DIST. SEL. CKT.
OS-201.1
LF
LF UP
OS-211
LF M
GA/GB
E
A/B SEL. DISTR.
LF K
TR/TRI
TRIP
STA/STB
GA/GB
A/B SEL. DISTR. (STEPS ONE STEP)
H
S
O
K/K1 (SLOW RELEASE)
LF
SL
CO
(NOTE) LO
L
BA/BA1
NOTE: (LO) RELAY RELEASES UNLESS HELD BY START CKT (AL) RELAY OPERATED, INDICATING CALLS WAITING IN OTHER BANKS.
ES-240292 ISS. 18-D LINE & TRIP CKT
ES-240293 ISS. 10-D START CKT
TRIP AND START CKT RELEASE
PANEL GCO
SDR. SEL. TYPE
OS-202.1
ILL. BELL TEL. CO. — PLANT SCHOOL
ISSUE 1
DATE 6-32
BY GHH

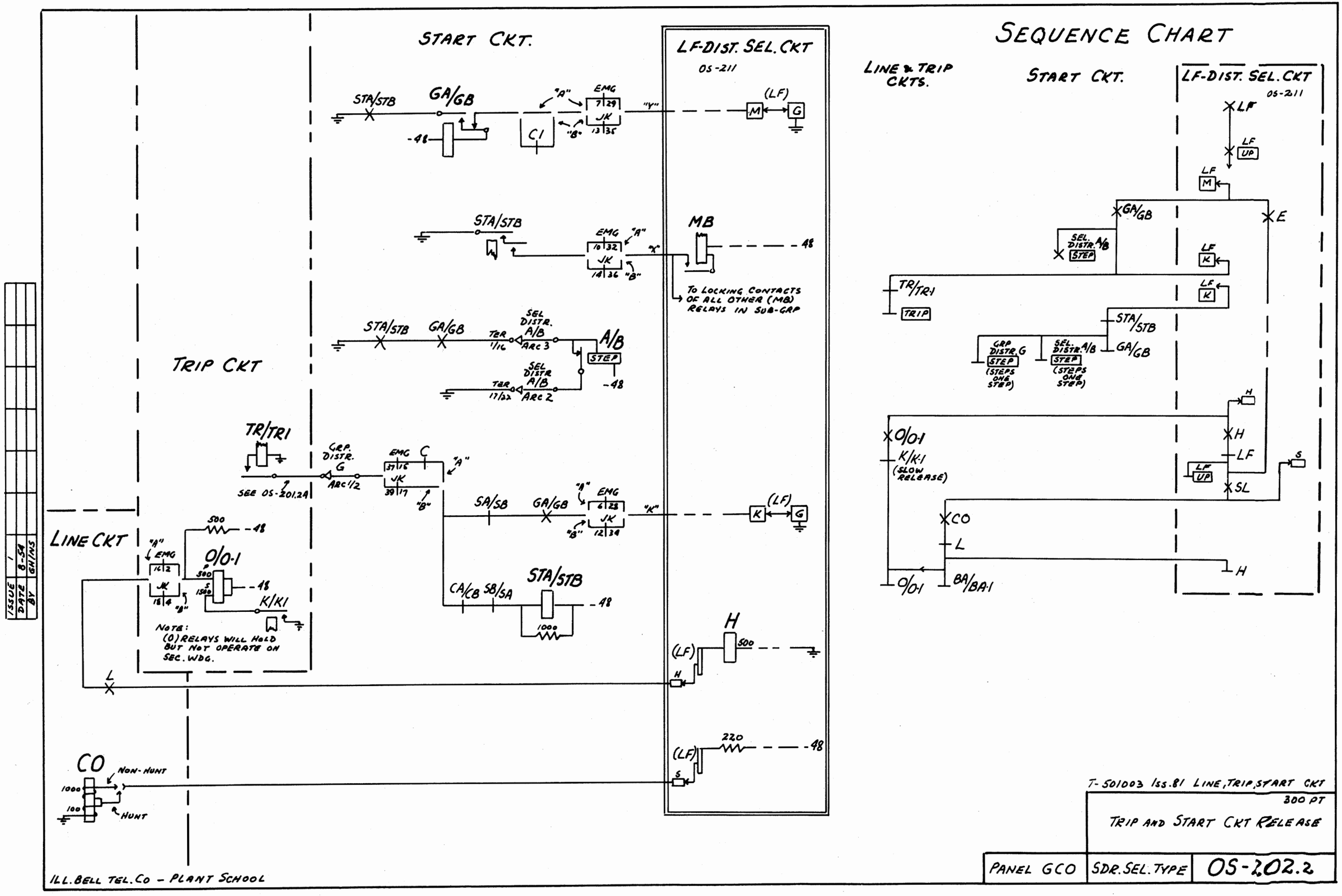
START CKT.
LF-DIST. SEL. CKT
OS-211
STA/STB
GA/GB
-48
"A"
"B"
EMG
7|29
JK
13|35
C1
"Y"
(LF)
M
G
STA/STB
EMG
10|32
JK
14|36
"A"
"B"
"X"
MB
-48
TO LOCKING CONTACTS OF ALL OTHER (MB) RELAYS IN SUB-GRP
STA/STB
GA/GB
TER 1/16
SEL DISTR. A/B
ARC 3
A/B
STEP
-48
TER 17/22
SEL DISTR A/B
ARC 2
TRIP CKT
TR/TR1
SEE OS-201.2A
GRP. DISTR. G
ARC 1/2
EMG
37|15
C
JK
39|17
"A"
"B"
SA/SB
GA/GB
"A"
EMG
6|28
JK
12|34
"B"
"K"
K
(LF)
G
LINE CKT
500
-48
"A"
EMG
16|2
JK
15|4
"B"
O/O-1
500
S
1500
-48
K/K1
NOTE:
(O) RELAYS WILL HOLD BUT NOT OPERATE ON SEC. WDG.
CA/CB
SB/SA
STA/STB
-48
1000
H
(LF)
H
500
L
CO
NON-HUNT
1000
100
HUNT
(LF)
S
220
-48
SEQUENCE CHART
LINE & TRIP CKTS.
START CKT.
LF-DIST. SEL. CKT
OS-211
LF
LF UP
LF M
GA/GB
E
SEL. DISTR. A/B STEP
LF K
LF K
TR/TR-1
TRIP
STA/STB
GRP DISTR. G STEP (STEPS ONE STEP)
SEL. DISTR. A/B STEP (STEPS ONE STEP)
GA/GB
H
O/O-1
K/K-1 (SLOW RELEASE)
H
LF
LF UP
S
SL
CO
L
H
O/O-1
BA/BA-1
ISSUE 1
DATE 8-54
BY GH/NS
T-501003 Iss.81 LINE, TRIP, START CKT
300 PT
TRIP AND START CKT RELEASE
PANEL GCO
SDR. SEL. TYPE
OS-202.2
ILL. BELL TEL. CO - PLANT SCHOOL

SEQUENCE CHART

(A) ALL SELECTORS BUSY "A" GRP.

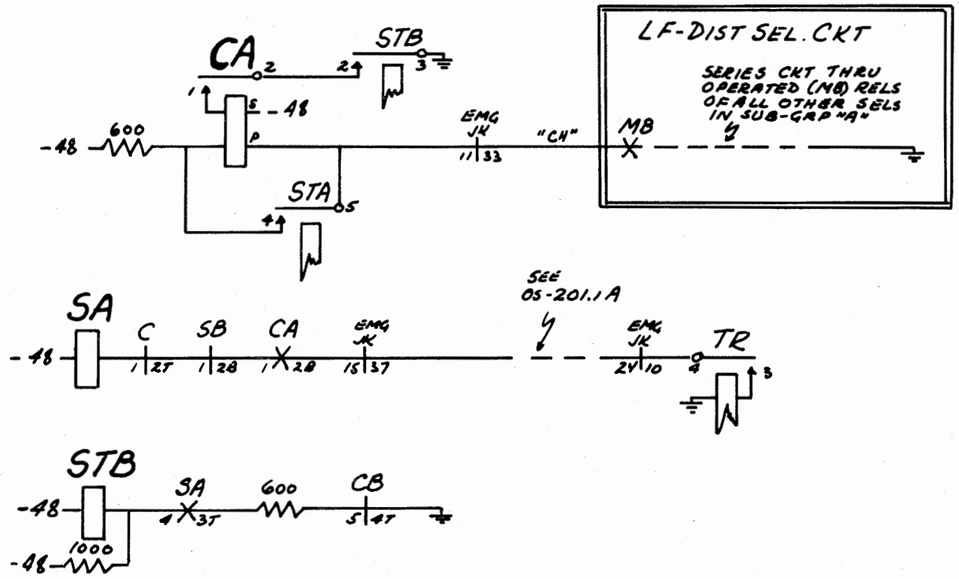

(A) ALL SELECTORS BUSY SUB-GRP "A"

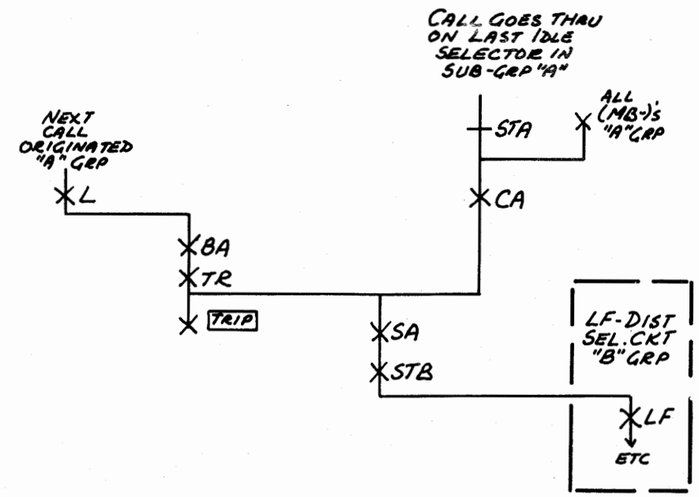

(B) ALL SELECTORS BUSY BOTH SUB-GRPS

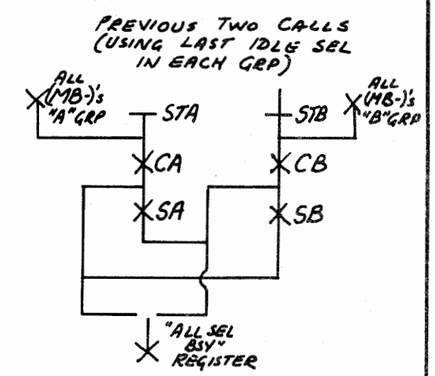

(C) SIMULTANEOUS CALLS (SAME BANK)

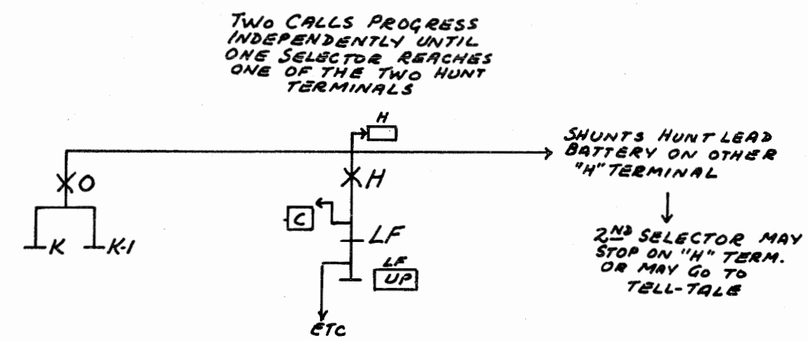

(C) SIMULTANEOUS CALLS "A" GRP AND "B" GRP

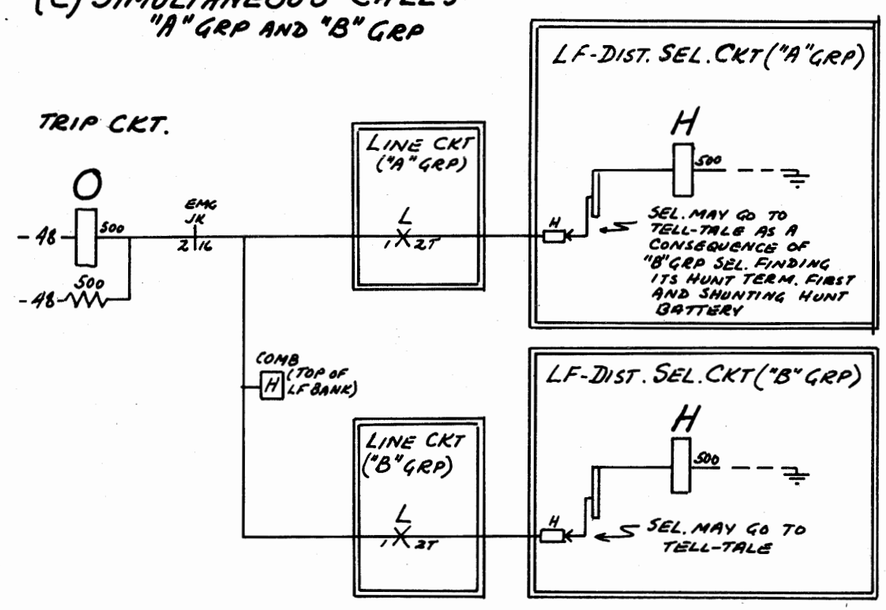

(B) ALL SELECTORS BUSY "A" GRP AND "B" GRP

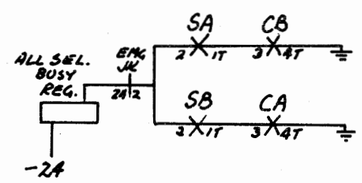

ES-240292 Iss. 18D LINE & TRIP CKT
ES-240293 " 10D START CKT

MISC. FEATURES:
(A) ALL SELS. BUSY "A" GRP
(B) ALL SELS. BUSY BOTH GRPS
(C) SIMULTAEOUS CALLS "A" AND "B" GRPS

PANEL GCO	SDR. SEL. TYPE	OS-203.1

ISSUE 1 | DATE 10-54 | BY CHH

ILL. BELL TEL. CO- PLANT SCHOOL

SEQUENCE CHART

(A) ALL SELECTORS BUSY "A" GRP.

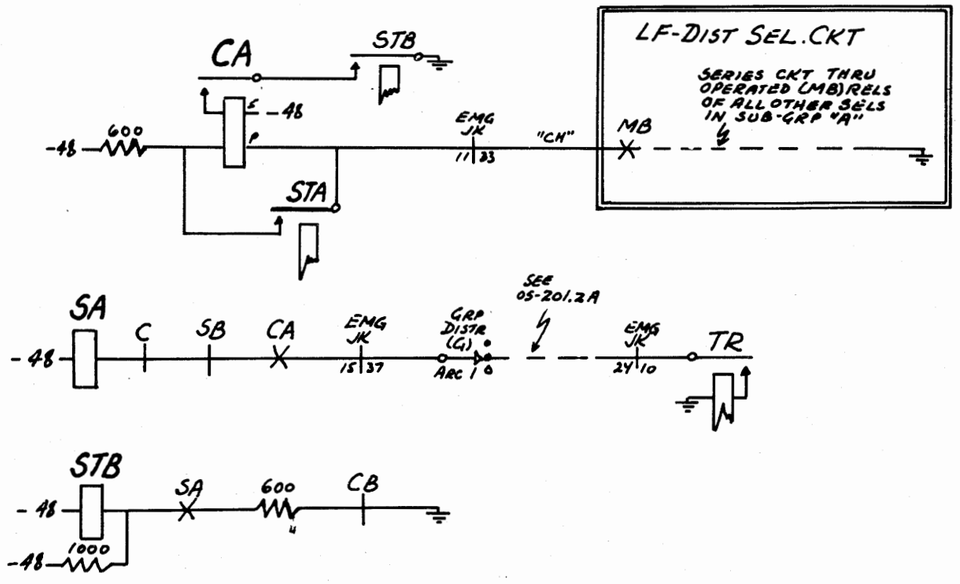

(A) ALL SELECTORS BUSY SUB-GRP "A"

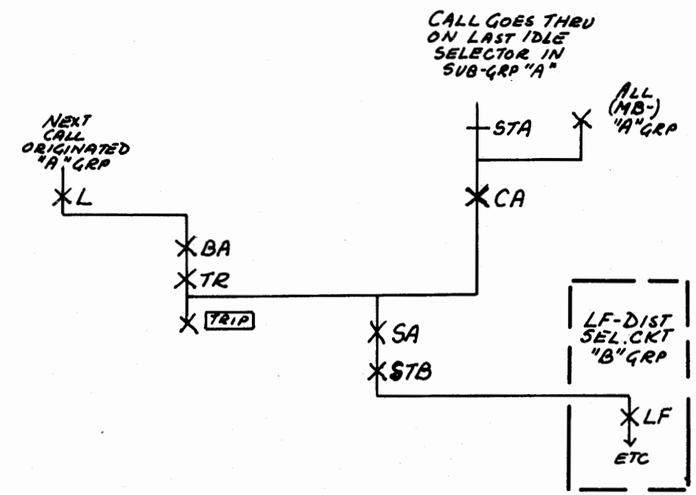

(B) ALL SELECTORS BUSY BOTH SUB-GRPS

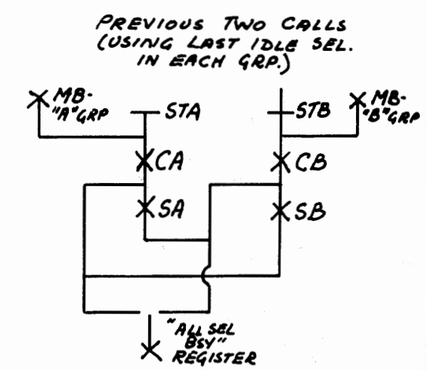

(C) SIMULTANEOUS CALLS "A" AND "B" GRPS. (SAME BANK)

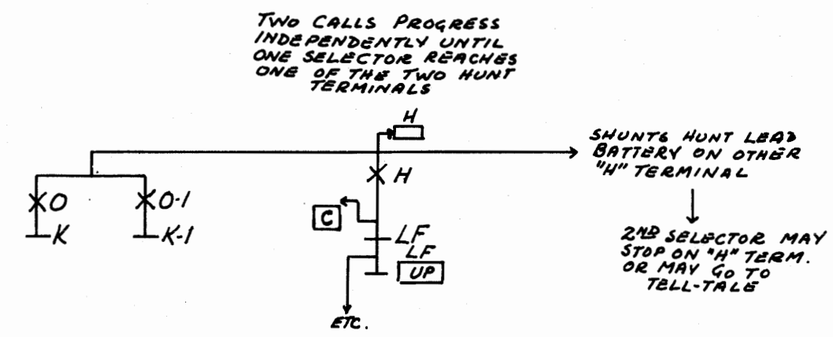

(C) SIMULTANEOUS CALLS "A" GRP AND "B" GRP

TRIP CKT

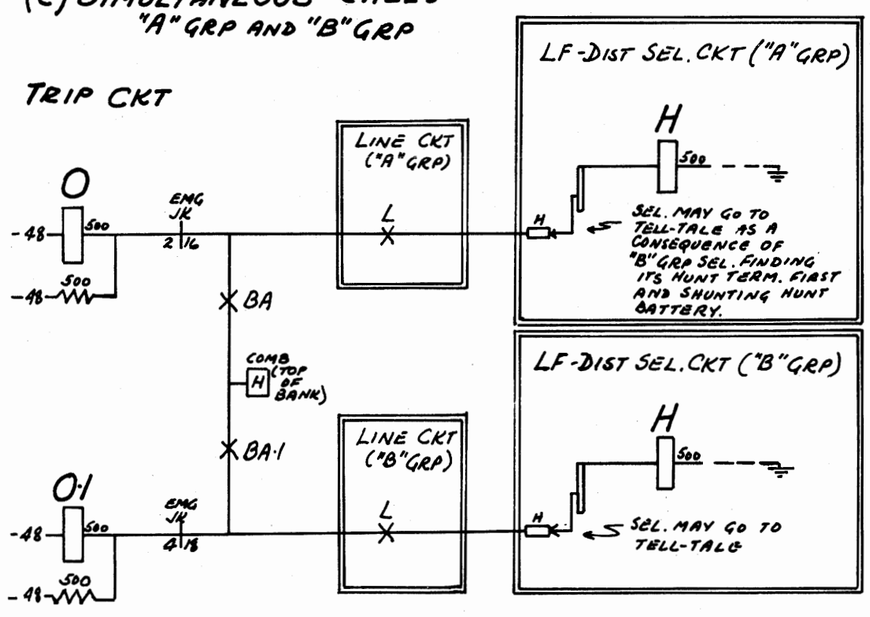

(B) ALL SELECTORS BUSY "A" GRP AND "B" GRP

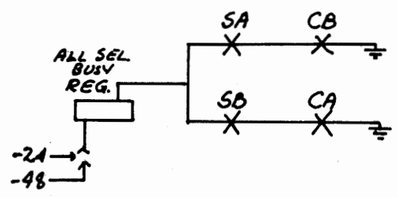

ISSUE	1	
DATE	8-54	
BY	GH/MS	

T-501003 Iss.81 LINE, TRIP, START CKT

300 PT.

MISC. FEATURES:
(A) ALL SELS. BUSY "A" GRP
(B) ALL SELS. BUSY BOTH GRPS
(C) SIMULTAEOUS CALLS "A" AND "B" GRPS

PANEL GCO	SDR. SEL. TYPE	OS-203.2

LF-DIST. SEL. CKT

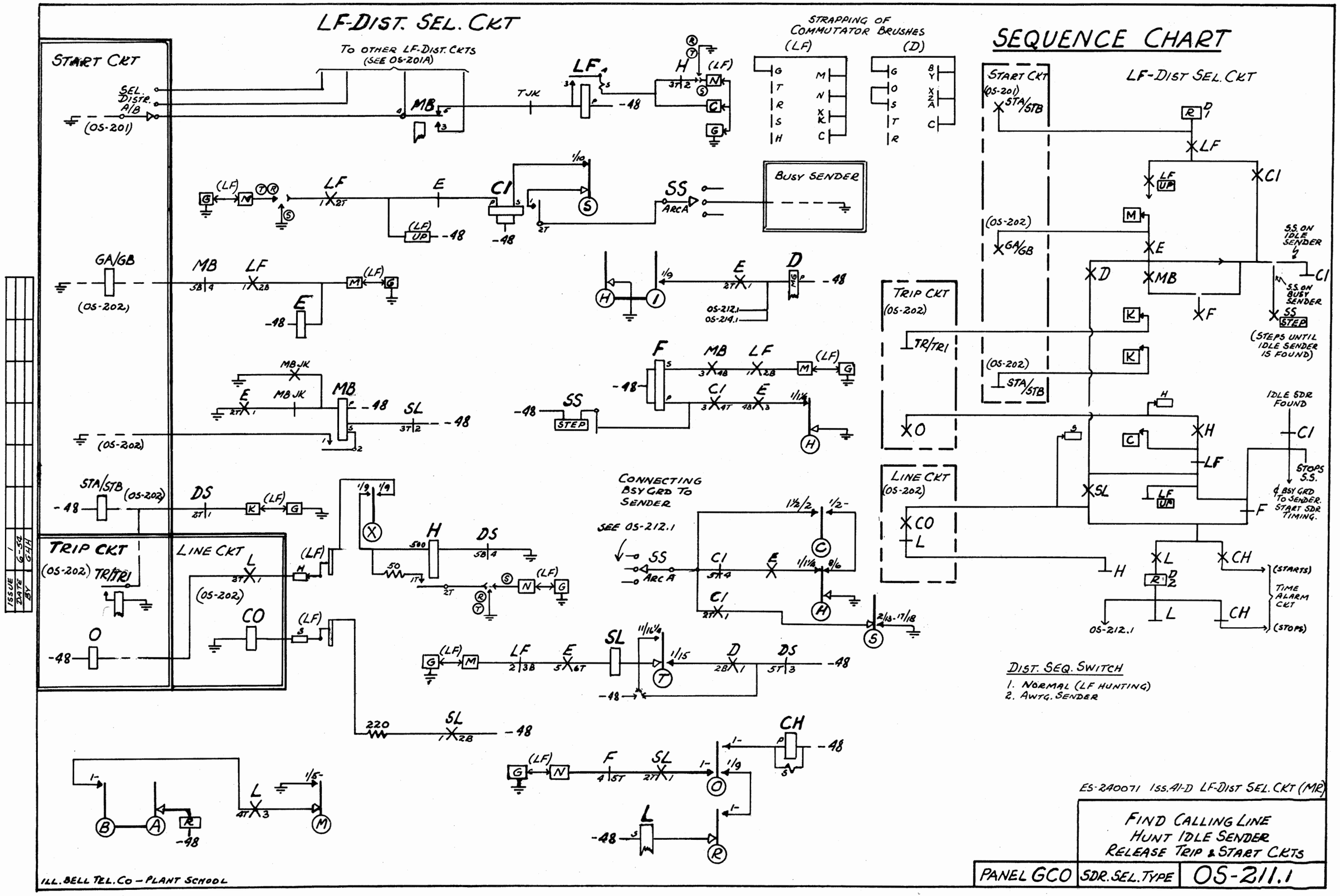

LF-DIST SEL. CKT.

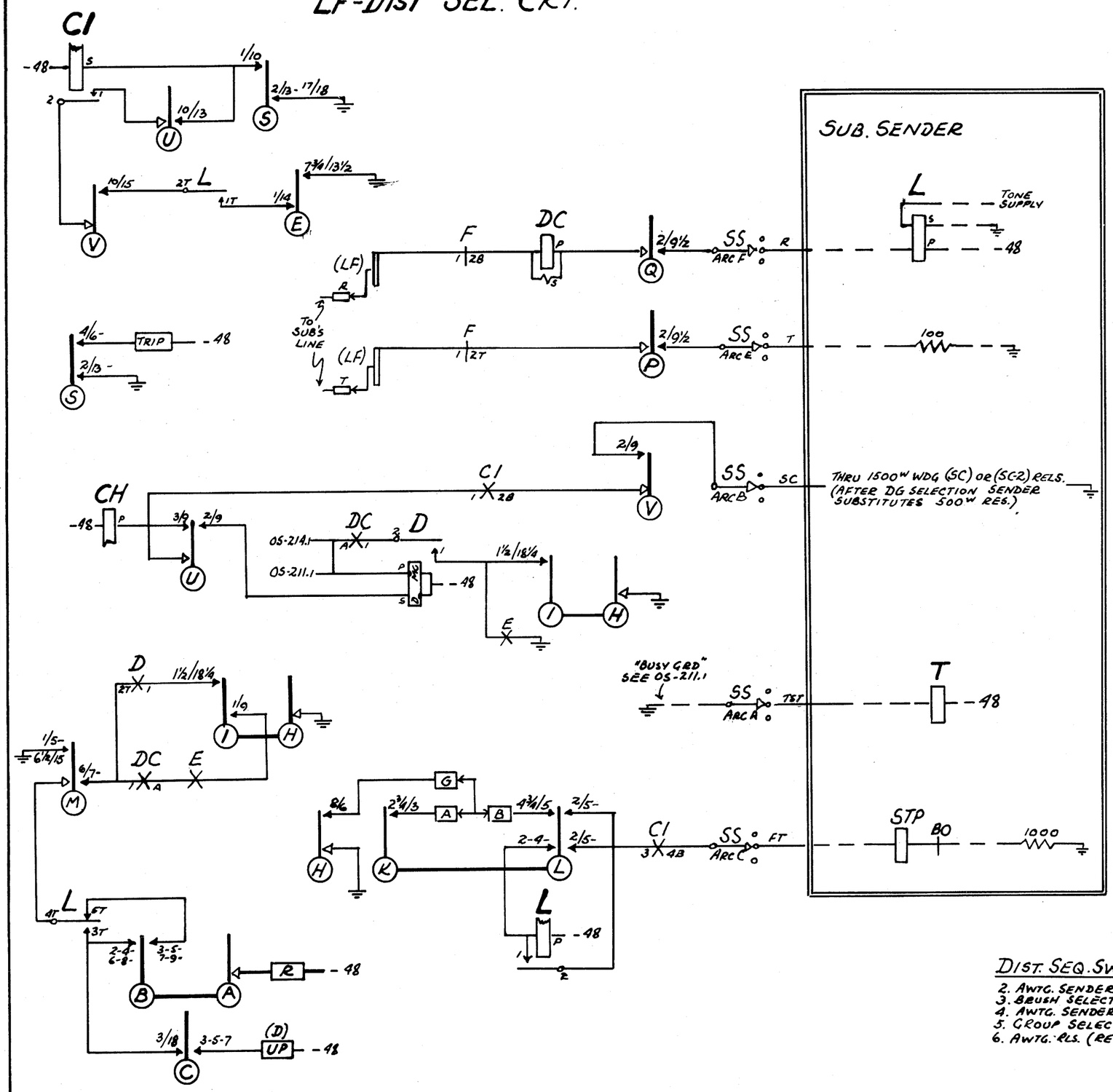

ILL. BELL TEL. CO. - PLANT SCHOOL

SEQUENCE CHART

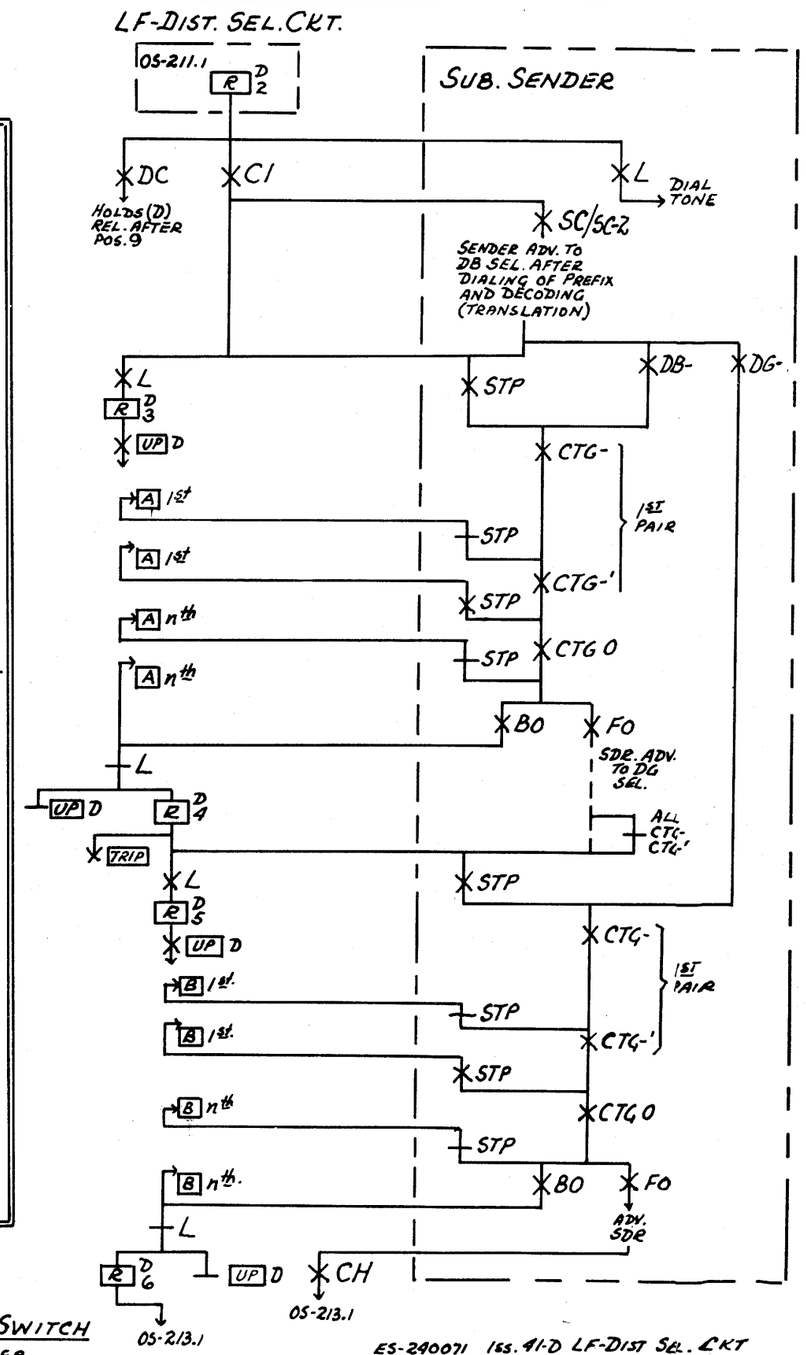

DIST. SEQ. SWITCH

2. AWTG. SENDER
3. BRUSH SELECTION
4. AWTG. SENDER (TRIP)
5. GROUP SELECTION
6. AWTG. RLS. (RETURN ON W.O.)

ES-240071 Iss. 41-D LF-DIST SEL. CKT

IMR

DIAL TONE TO CALLING SUB-DISTRICT BRUSH & GROUP SEL.

PANEL GCO	SDR. SEL. TYPE	OS-212.1

LF-DIST. SEL. CKT.

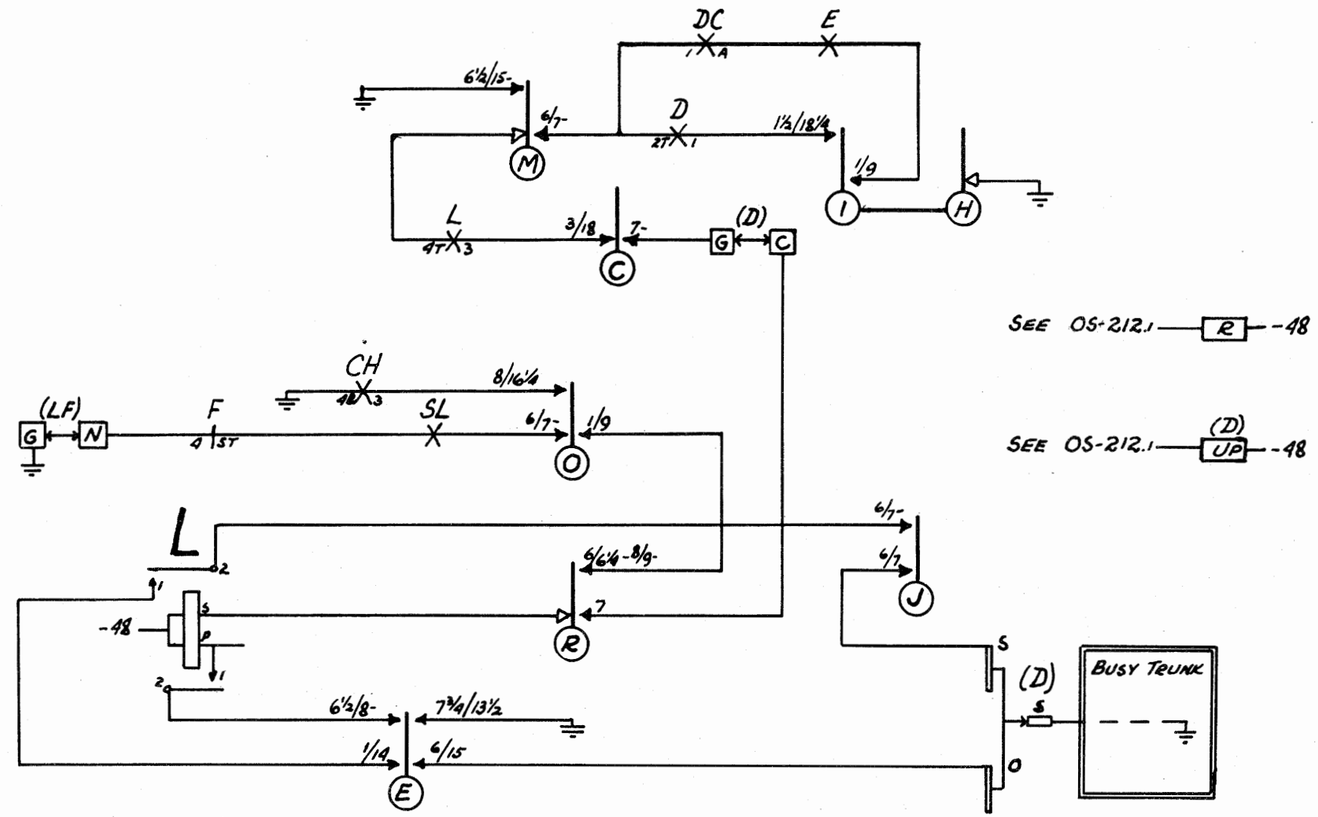

CONNECTING BUSY GRD TO TRUNK:

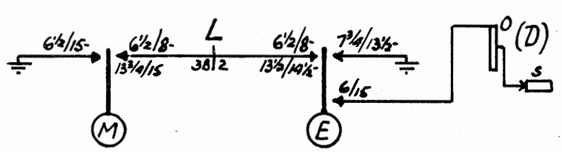

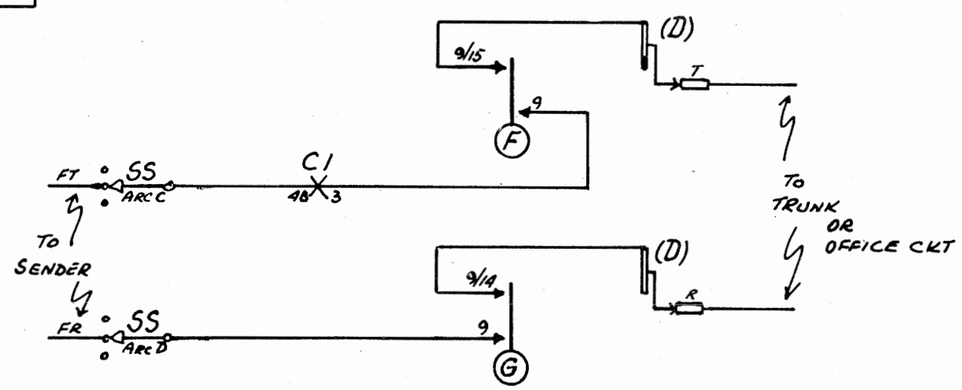

SEQUENCE CHART

LF-DIST. SEL. CKT

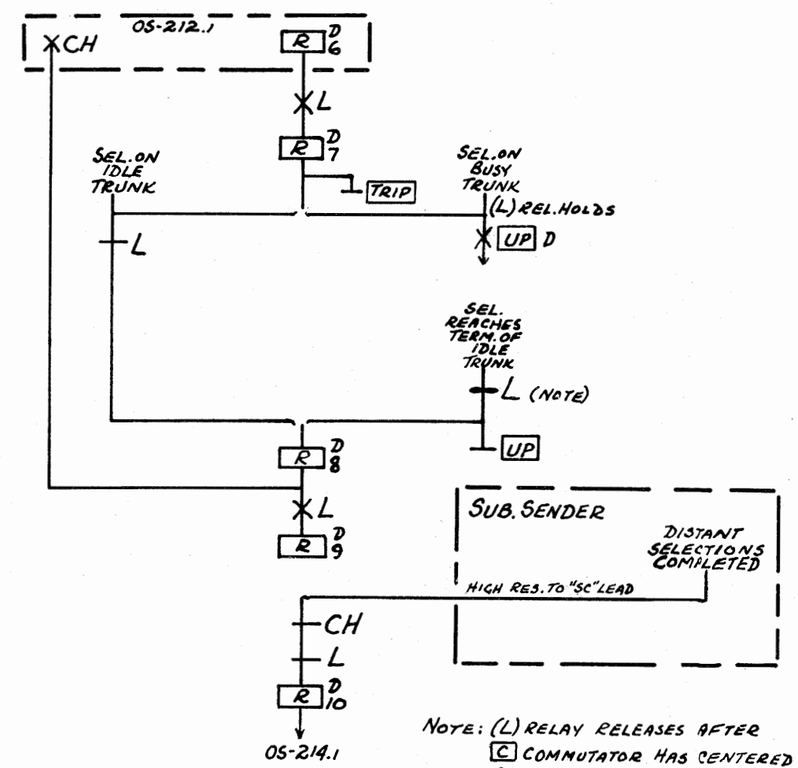

NOTE: (L) RELAY RELEASES AFTER [C] COMMUTATOR HAS CENTERED SELECTOR ON BANK TERMINAL.

DIST. SEQ. SWITCH

6. AWTG. RLS. (RETURN ON W.O.)
7. TRUNK HUNTING
8. AWTG. SENDER
9. SELECTION BEYOND
10. AWTG. SENDER

ISSUE	DATE	BY
1	6-54	GHH

ES-240071 ISS. 41-D LF-DIST. SEL CKT.

TRUNK HUNT
SELECTION BEYOND
DISTRICT ADVANCE

IMR

PANEL GCO	SDR. SEL. TYPE	OS-213.1

ILL. BELL TEL. CO. — PLANT SCHOOL

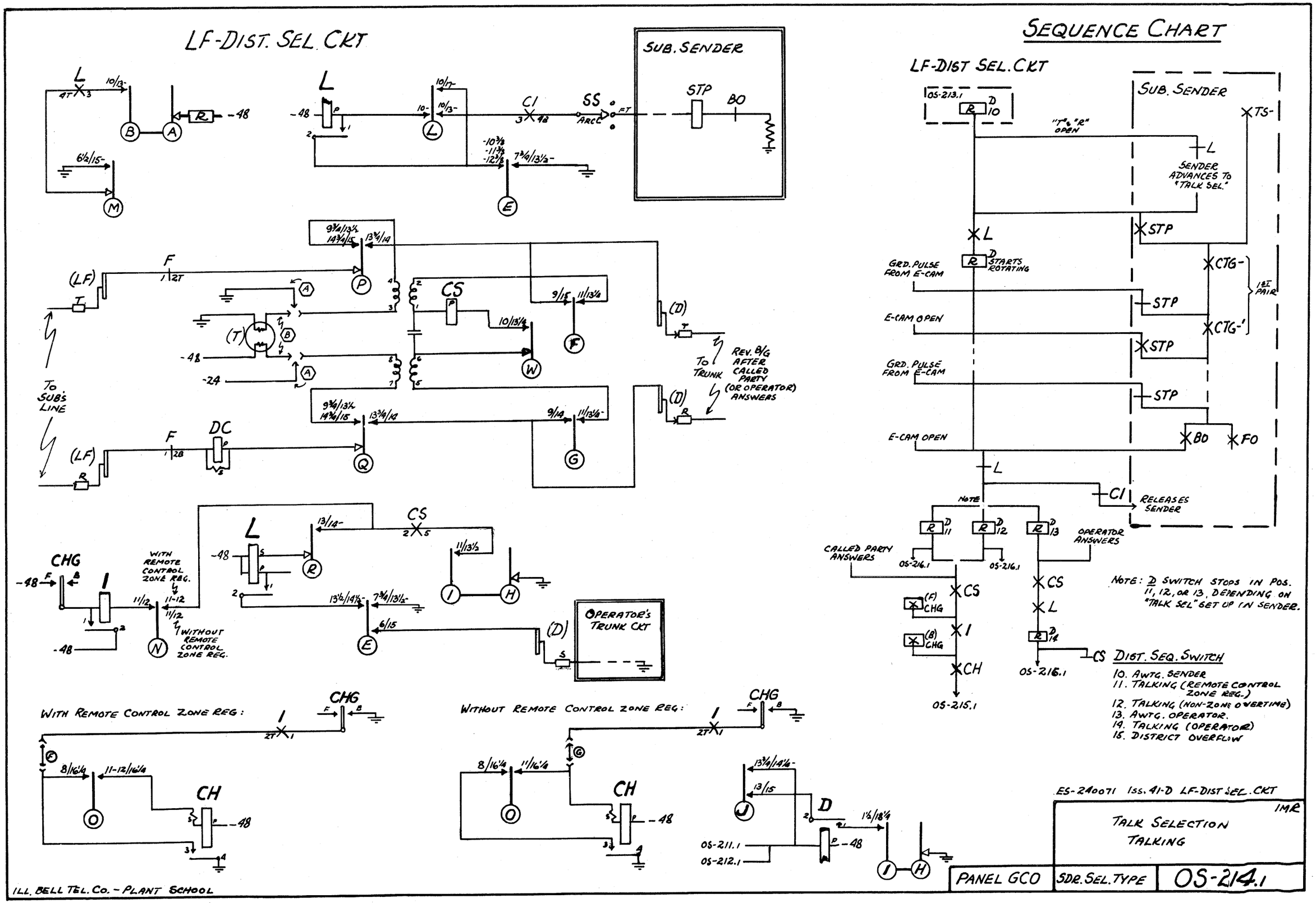
LF-DIST. SEL. CKT
SUB. SENDER
STP
BO
SS
ARCC
C1
CS
DC
CHG
CH
(LF)
To SUB's LINE
To TRUNK
REV. B/G AFTER CALLED PARTY (OR OPERATOR) ANSWERS
WITH REMOTE CONTROL ZONE REG.
WITHOUT REMOTE CONTROL ZONE REG.
OPERATOR'S TRUNK CKT
WITH REMOTE CONTROL ZONE REG:
WITHOUT REMOTE CONTROL ZONE REG:
SEQUENCE CHART
LF-DIST SEL. CKT
SUB. SENDER
OS-213.1
"T" & "R" OPEN
SENDER ADVANCES TO "TALK SEL."
GRD. PULSE FROM E-CAM
STARTS ROTATING
E-CAM OPEN
RELEASES SENDER
NOTE
CALLED PARTY ANSWERS
OPERATOR ANSWERS
OS-216.1
OS-215.1
NOTE: D SWITCH STOPS IN POS. 11, 12, OR 13, DEPENDING ON "TALK SEL" SET UP IN SENDER.
DIST. SEQ. SWITCH
10. AWTG. SENDER
11. TALKING (REMOTE CONTROL ZONE REG.)
12. TALKING (NON-ZONE OVERTIME)
13. AWTG. OPERATOR.
14. TALKING (OPERATOR)
15. DISTRICT OVERFLOW
ES-240071 Iss. 41-D LF-DIST SEL. CKT
TALK SELECTION
TALKING
PANEL GCO
SDR. SEL. TYPE
OS-214.1
ILL. BELL TEL. CO. - PLANT SCHOOL

LF-DIST. SEL. CKT.

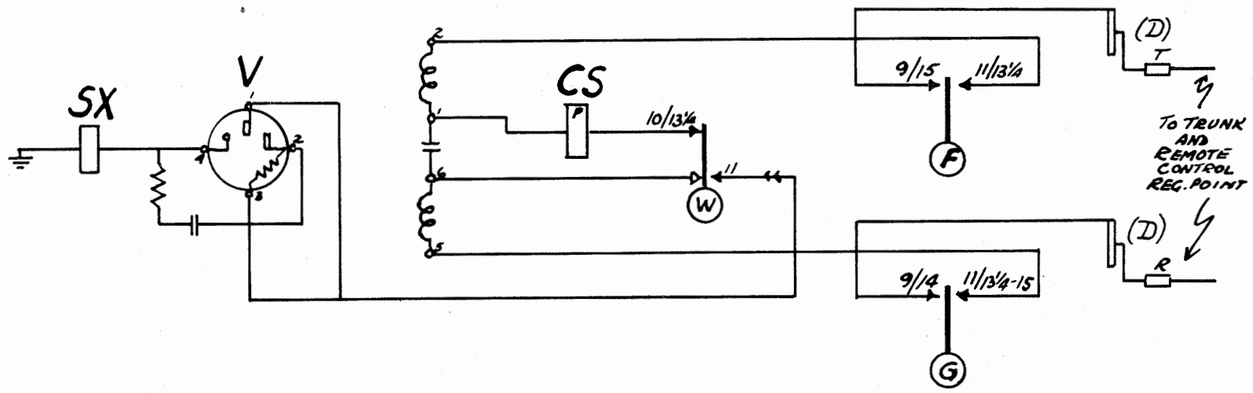

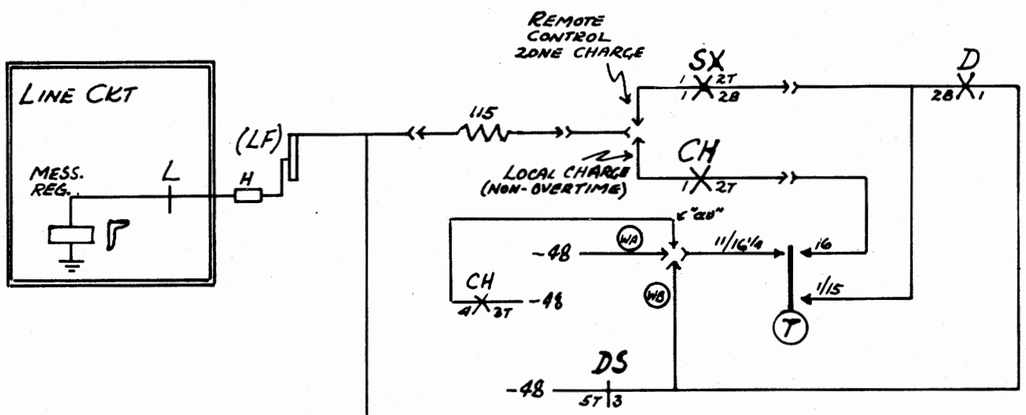

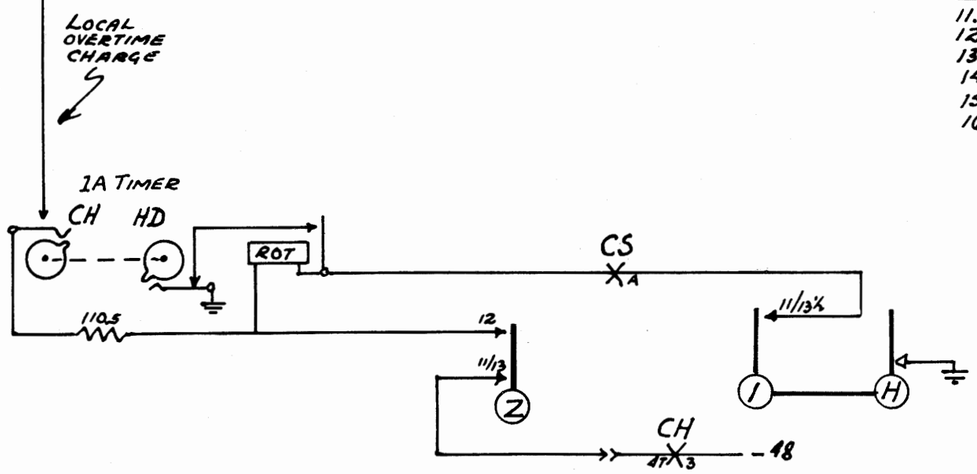

DIST. SEQ. SWITCH

11. TALKING
12. "
13. AWTG. OPERATOR
14. TALKING (OPERATOR)
15. DIST. OVERFLOW
16. MESSAGE REGISTER

SEQUENCE CHART

(A) LOCAL CHARGE (NON-OVERTIME)

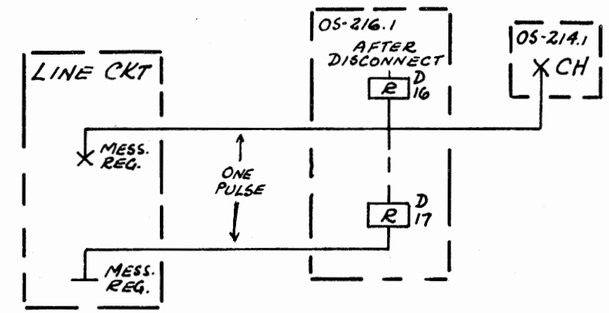

(B) REMOTE CONTROL ZONE CHARGE

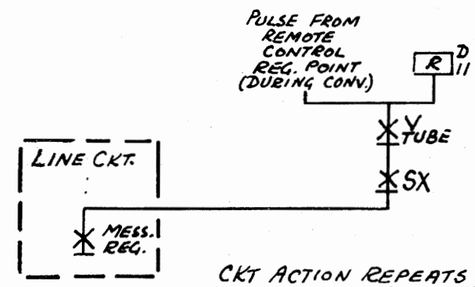

CKT ACTION REPEATS FOR EACH PULSE RECEIVED FROM REMOTE CONTROL REG. POINT.

(C) LOCAL OVERTIME CHARGE

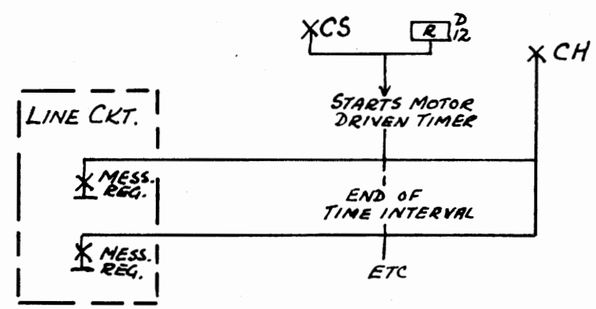

ES-240071 ISS. 41-D LF-DIST. SEL CKT

1MR

CHARGING

PANEL GCO	SDR. SEL. TYPE	OS-215.1

ILL. BELL TEL. CO. - PLANT SCHOOL

ISSUE	1
DATE	6-54
BY	GHH

LF-DIST. SEL. CKT.

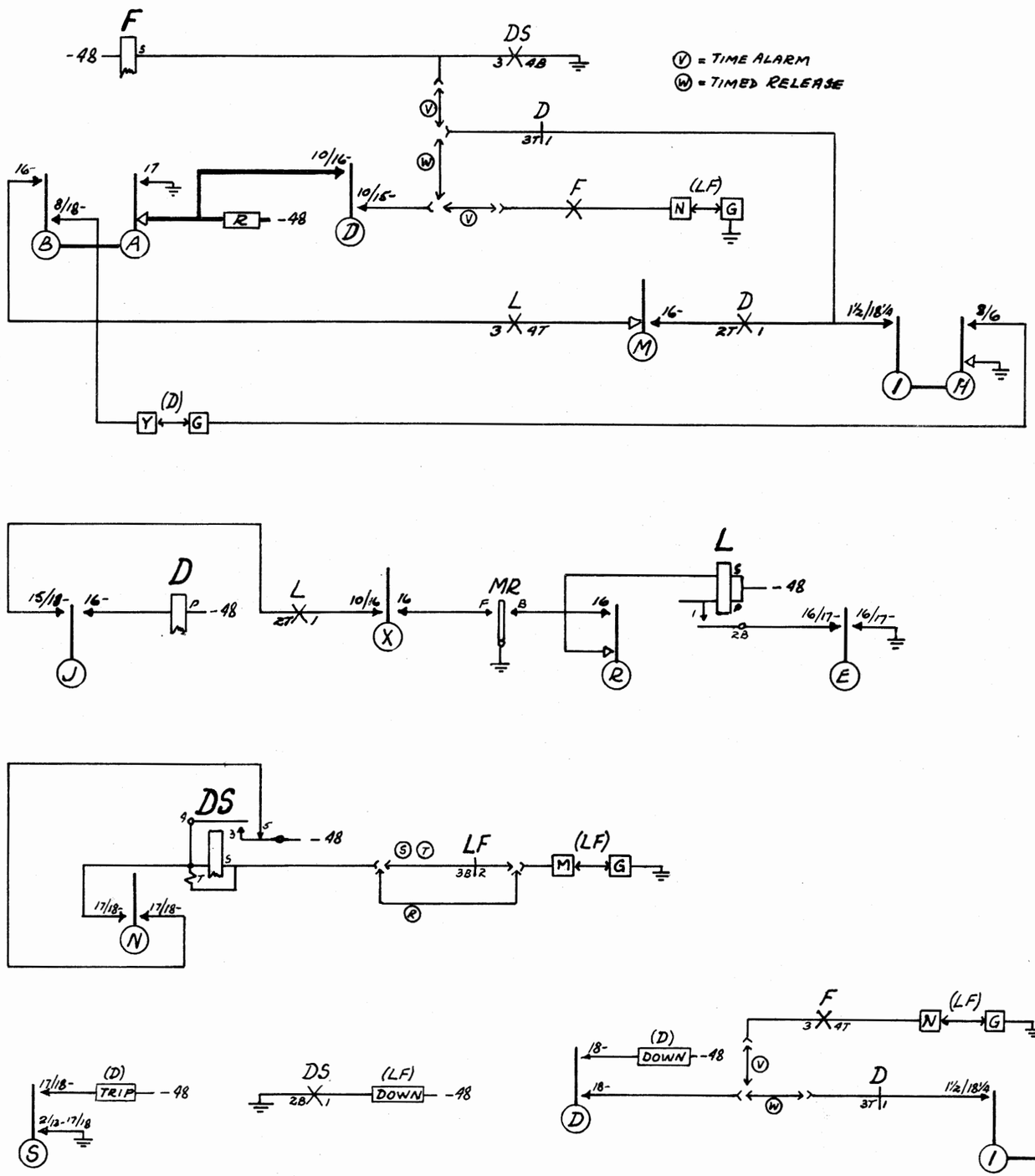

SEQUENCE CHART

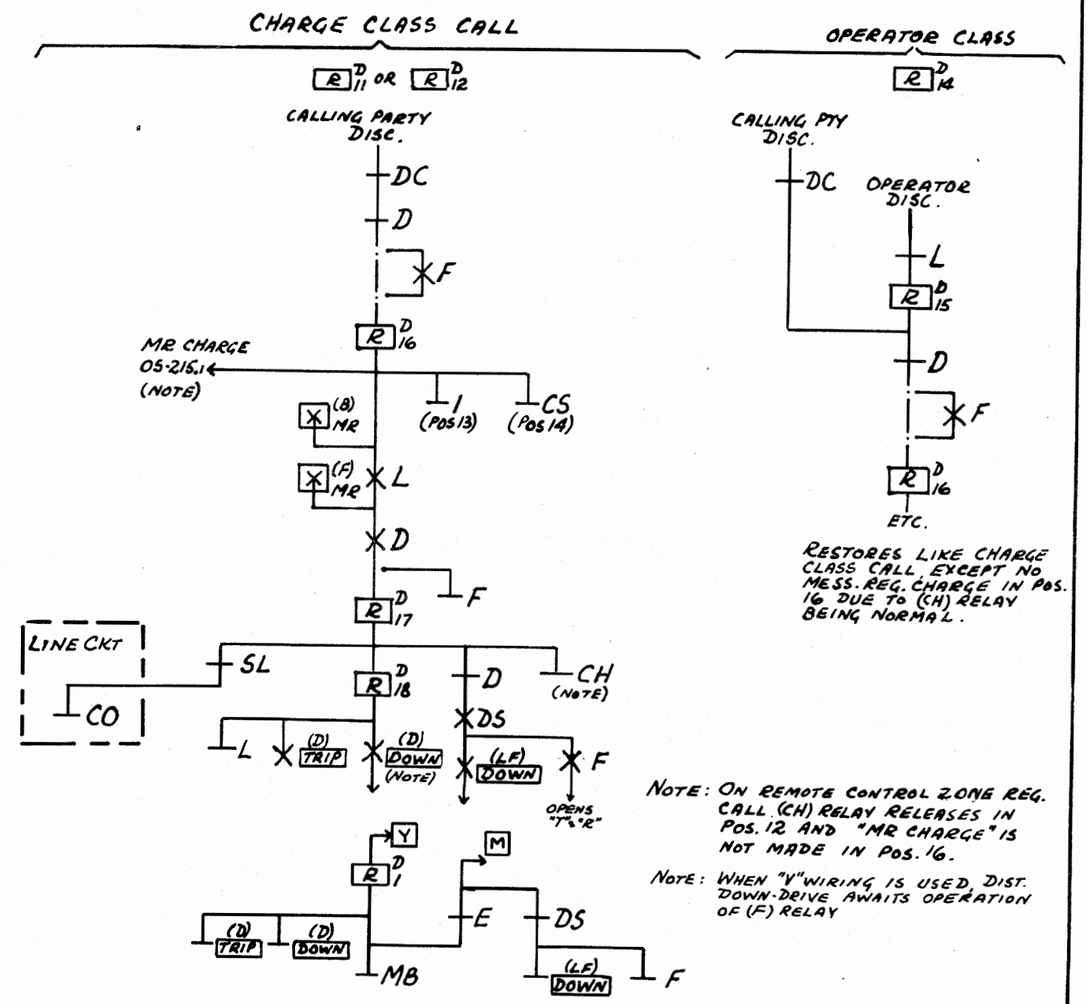

RESTORES LIKE CHARGE CLASS CALL, EXCEPT NO MESS. REG. CHARGE IN POS. 16 DUE TO (CH) RELAY BEING NORMAL.

NOTE: ON REMOTE CONTROL ZONE REG. CALL (CH) RELAY RELEASES IN POS. 12 AND "MR CHARGE" IS NOT MADE IN POS. 16.

NOTE: WHEN "V" WIRING IS USED, DIST. DOWN-DRIVE AWAITS OPERATION OF (F) RELAY

DIST. SEQ. SWITCH

11. TALKING
12. "
13. AWTG. OPERATOR
14. TALKING (OPERATOR)
15. DISTRICT OVERFLOW
16. MESSAGE REGISTER
17. PASS-BY
18. RETURN
1. NORMAL

ISSUE	DATE	BY
1	6-54	GHH

ES-240071 Iss. 41-D LF-DIST. SEL. CKT

CALLING SUB. DISCONNECTS LF-DISTRICT RESTORE

IMR

PANEL GCO	SDR. SEL. TYPE	OS-216.1

ILL. BELL TEL. CO. — PLANT SCHOOL

OS PAGE	CIRCUIT FUNCTION	R2 SW. POS	R1 SW. POS.
221.1	SENDER SEIZED; DIAL TONE	1	1
222.1	DIALING	1	1
223.1(A)	TRANSLATOR BRUSH SELECTION	1	2
	" GROUP "	1	4
	" TERMINAL HUNTING	1	6
223.1(B)	TRANSLATION	1	8
223.1(C)	PULSE COUNT	1	8
224.1(A)	SETTING R-3 CLASS SWITCH		
224.1(B)	" R-5 COMP. RES. SWITCH		
224.1(C)	" R-4 ROUTE SWITCH		
224.1(D)	CHECK TRANSLATION REG. RELAYS; RESTORE TRANSLATOR	1	9
225.1(A)	DISTRICT BRUSH SELECTION	2	9
225.1(B)	" GROUP "	4	9
226.1(A)	OFFICE TEST	6	9
	" BRUSH SELECTION	8	9
226.1(B)	" GROUP "	10	9
227.1	TRUNK TEST	12	9
228.1	INCOMING BRUSH SELECTION	16	12
	" GROUP "	18	12
229.1(A)	FINAL BRUSH SELECTION	2	13
229.1(B)	" TENS "	4	13
229.1(C)	" UNITS "	6	13
230.1	INCOMING ADVANCE	16	14
231.1(A)	PC1 PULSING – FUNDAMENTAL CIRCUIT	14	9
231.1(B)	" " – POSITIVE PULSES		
231.1(C)	" " – NEGATIVE "		
232.1	TALK SELECTION	SEE OS	SEE OS
233.1	SENDER RELEASE		
234.1	REGISTER RESTORAL		
235.1	"TM" REG. FUNCTION; SYNCHRONIZING (S) RELAY		
236.1	"M" REG. FUNCTION		

ISSUE	DATE	BY
1	12-58	GHH

ES-240053 SUBSCRIBER'S SENDER
NON-ZONE
NON-COIN

INDEX TO
OPERATIONAL SKETCHES

PANEL GCO | SEL. TYPE WITH SDR. SEL & TRANSL. | OS-220.1

SEQUENCE CHART

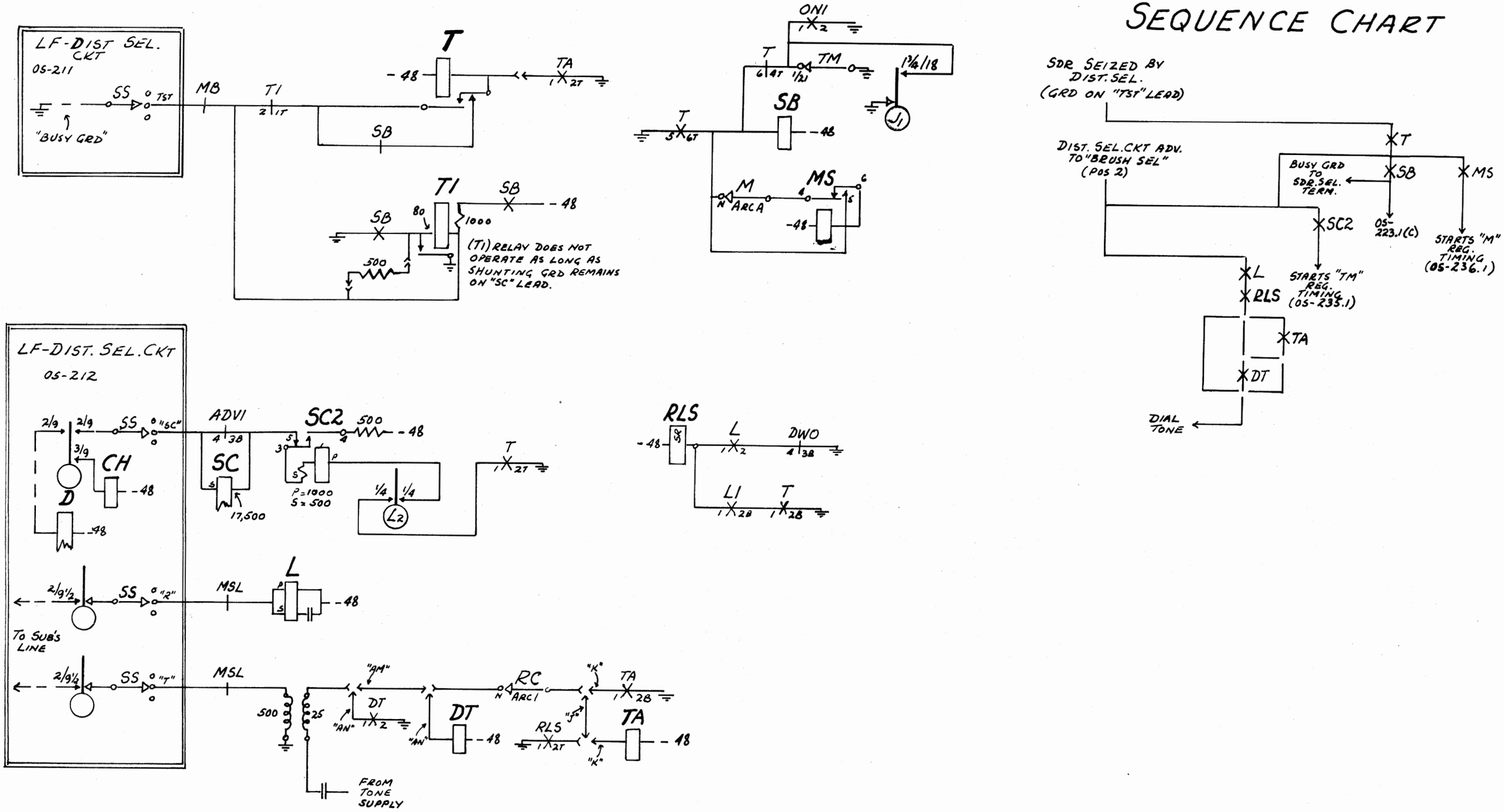

ISSUE	DATE	BY
1	12-54	GHH

ES-240053 1SS.51D SUBSCRIBER'S SENDER
NON-COIN
NON-ZONE

SENDER SEIZED
DIAL TONE

R2-1
R1-1

PANEL GCO

SEL. TYPE
SDR SEL. & TRANSL

OS-221.1

ILL. BELL TEL. CO — PLANT SCHOOL

SEQUENCE CHART

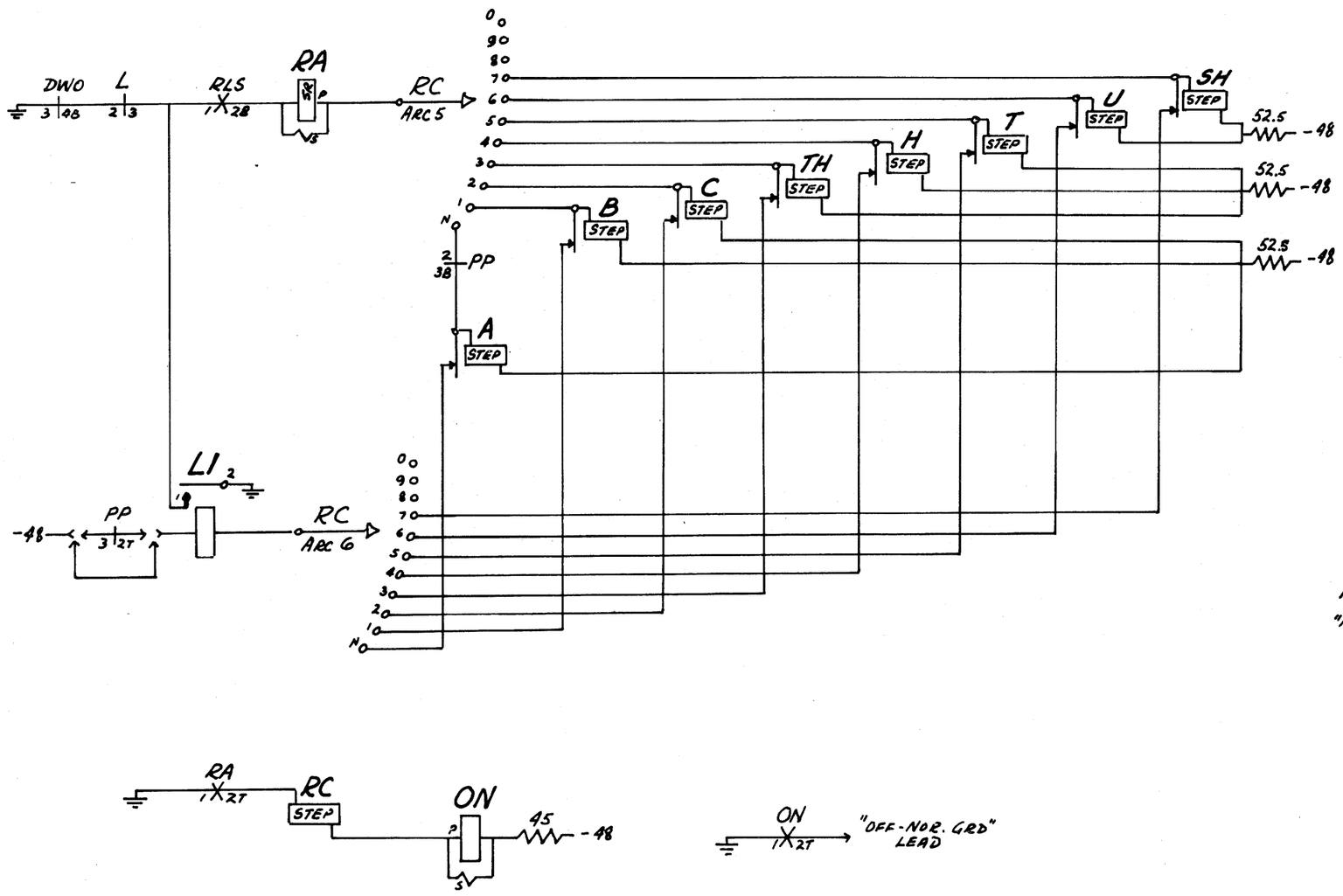

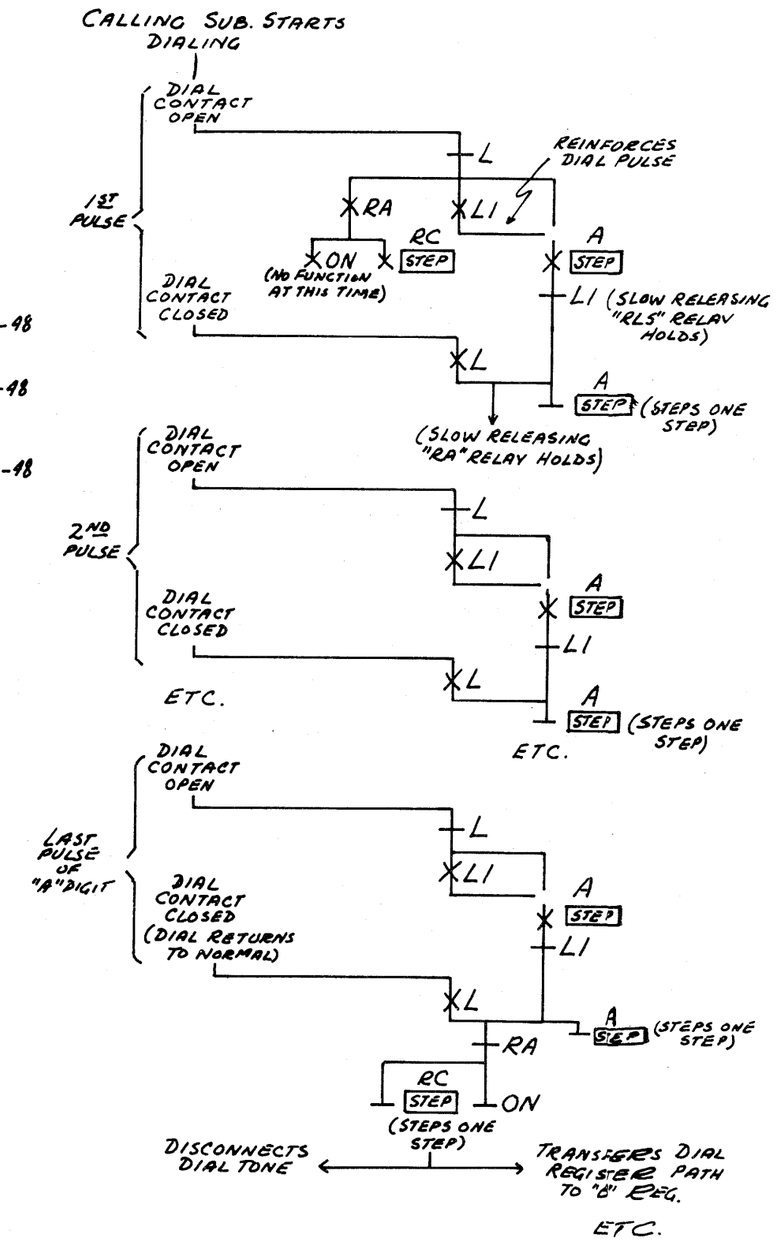

ES-240053 Iss.51D SUBSCRIBER'S SENDER. NON-ZONE NON-COIN

DIALING

R2-1
R1-1

PANEL GCO | SEL. TYPE WITH SDR. SEL. & TRANSL. | OS-222.1

ISSUE	DATE	
1	12-50	GHH
	13V	

ILL. BELL TEL. CO — PLANT SCHOOL

SEQUENCE CHART

TYPICAL WIRING TO TRANSLATOR HUNT BANK

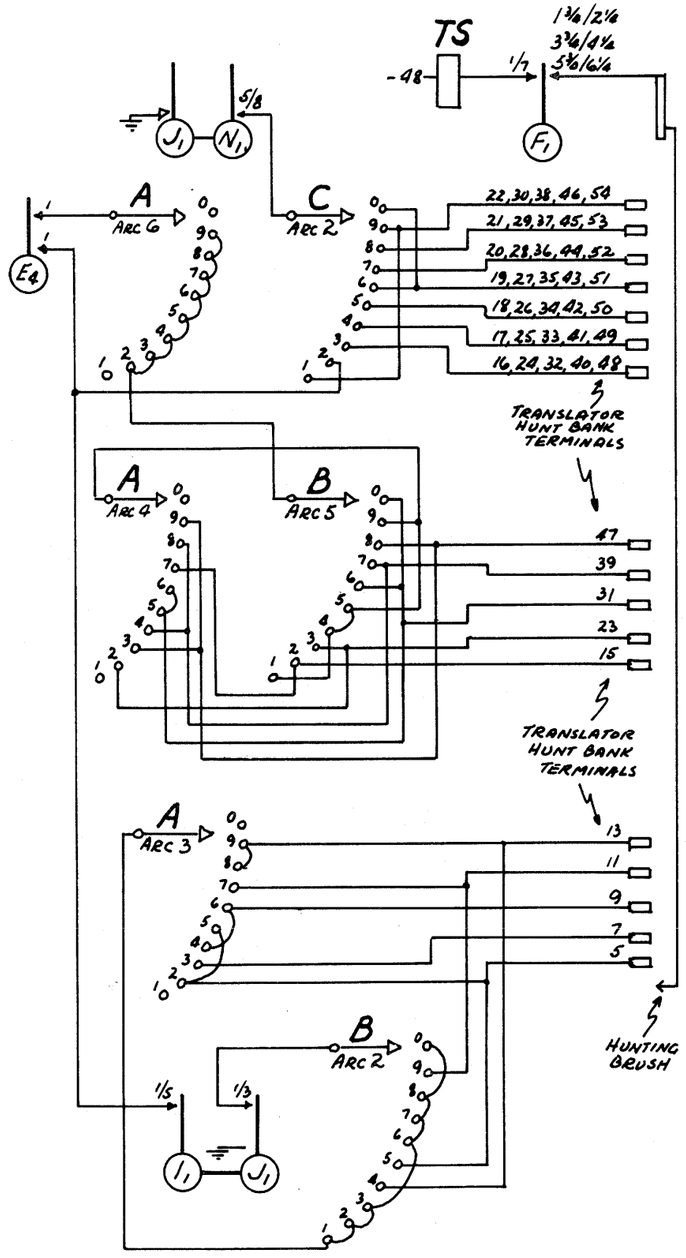

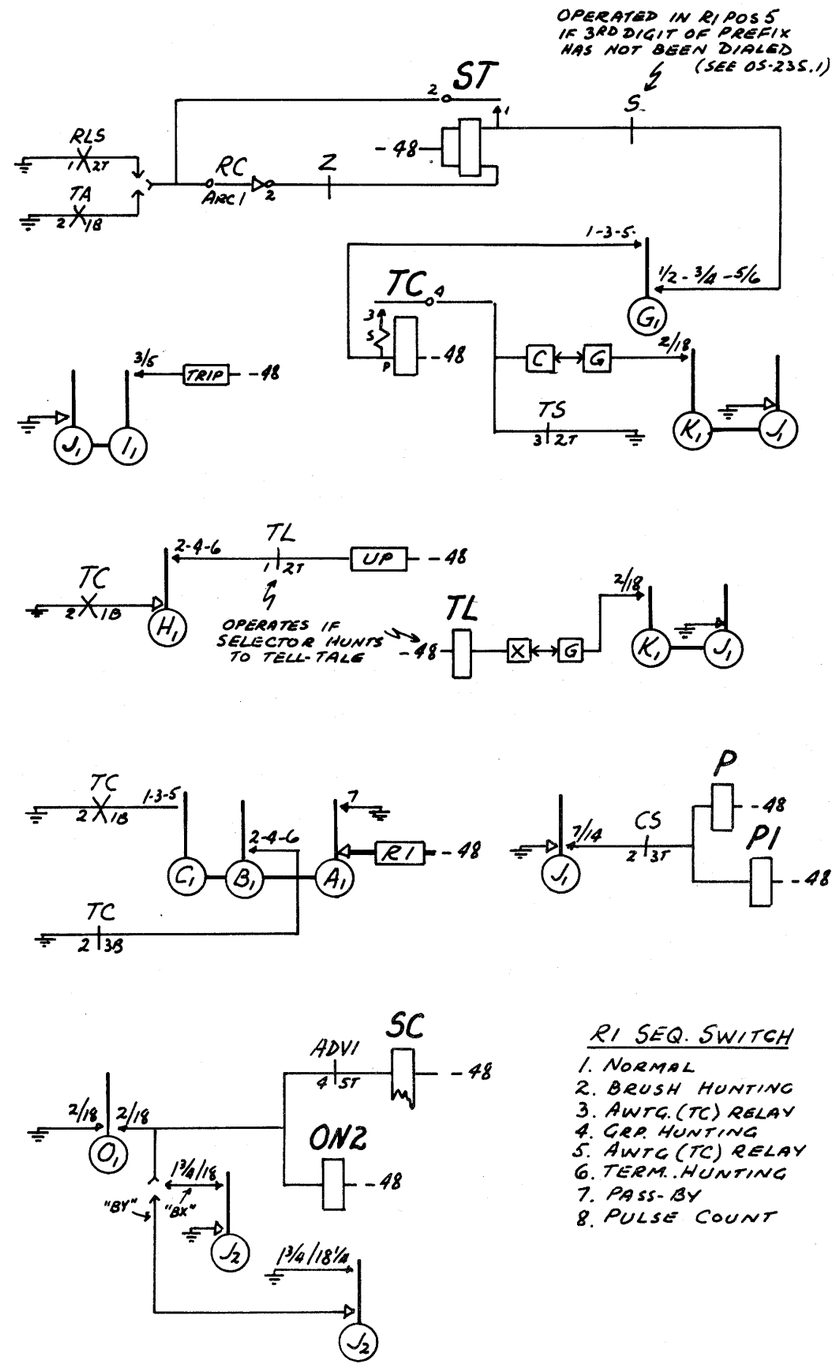

R1 SEQ. SWITCH

1. NORMAL
2. BRUSH HUNTING
3. AWTG. (TC) RELAY
4. GRP. HUNTING
5. AWTG (TC) RELAY
6. TERM. HUNTING
7. PASS-BY
8. PULSE COUNT

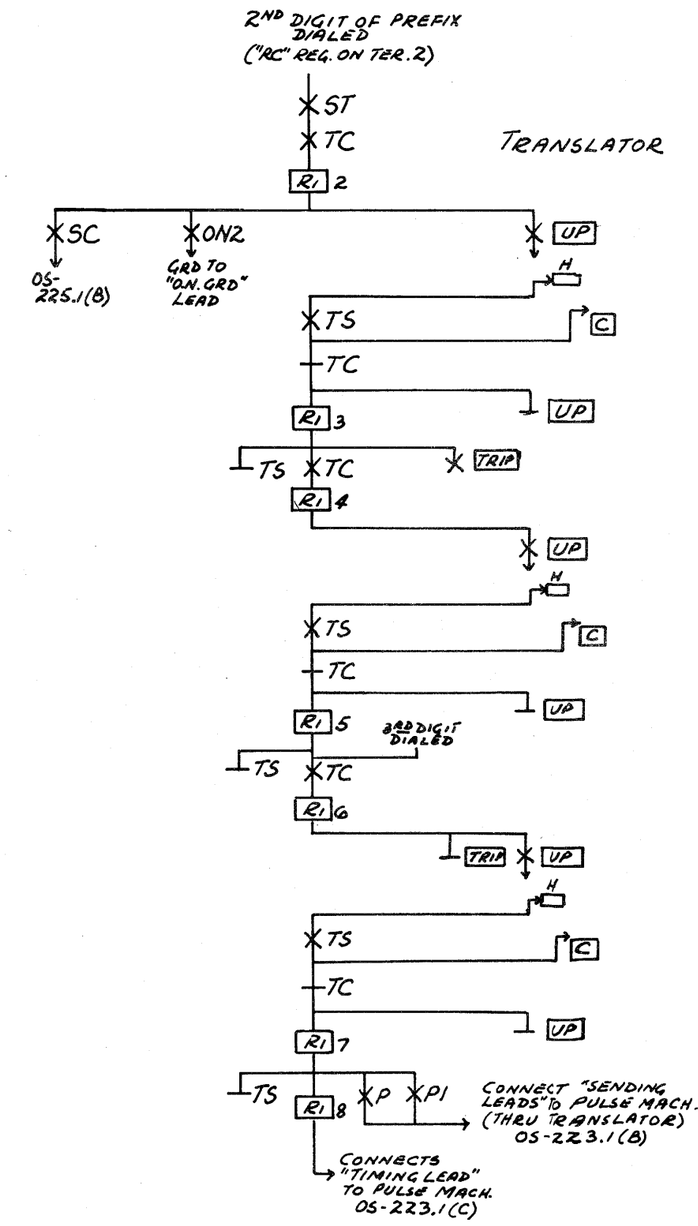

ES-240053 1ss. 51D SUBSCRIBER'S SDR
NON-ZONE
NON-COIN
RZ-1
R1-2/6

TRANSLATOR
BRUSH, GROUP, TERMINAL
HUNTING

ISSUE	1	
DATE	12-54	
BY	GHH	

PANEL GCO | SEL. TYPE WITH SDR. SEL & TRANSL. | OS-223.1(A)

ILL. BELL TEL. CO – PLANT SCHOOL

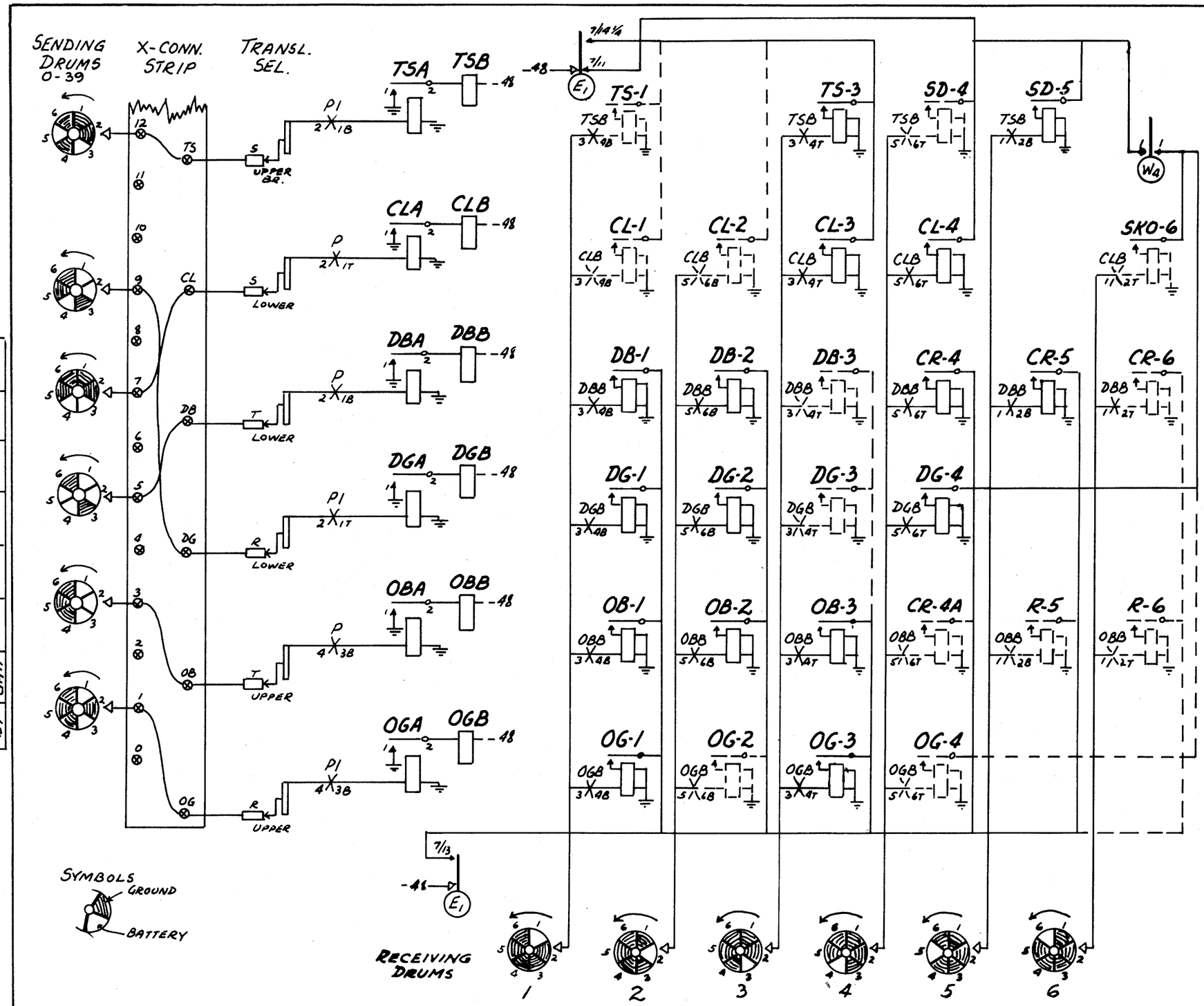

SEQUENCE CHART

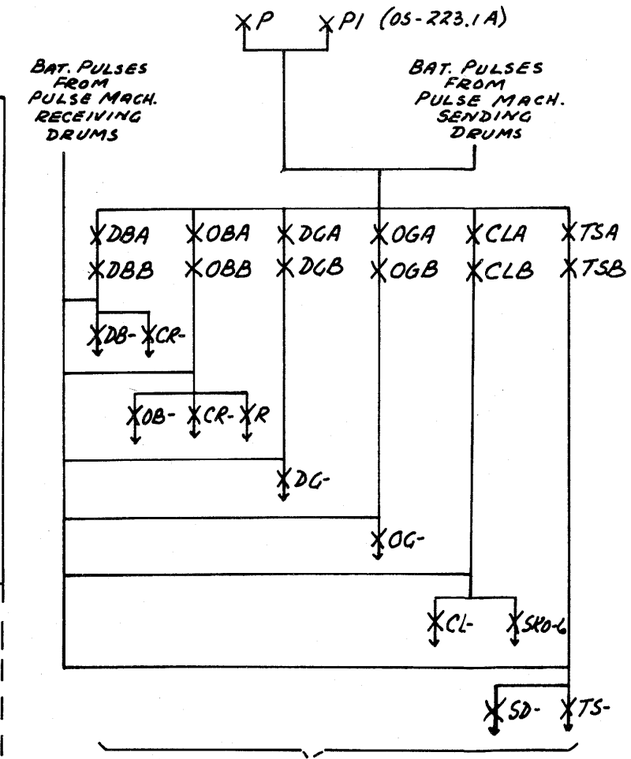

RELAYS SET UP INFORMATION IN SENDER FOR USE IN MAKING VARIOUS SELECTIONS, ETC.

NOTE 1: (DB-A), (DB-B), (OB-A) ETC. MAY OPERATE FROM ONE TO SIX TIMES DEPENDING ON THE NUMBER OF BATTERY SEGMENTS ON THE PARTICULAR PULSE MACHINE SENDING DRUM WHICH IS USED (SEE SHEET "C" FOR TIMING OF ONE COMPLETE REVOLUTION OF PULSE MACHINE)

NOTE 2: SOLID LINES ON SKETCH INDICATE RELAYS AND LEADS INVOLVED WHEN USING PULSE MACHINE SENDING DRUMS AS ILLUSTRATED.

DOTTED LINES SHOW RELAYS AND LEADS WHICH WOULD BE INVOLVED WHEN USING DRUMS HAVING OTHER POSSIBLE COMBINATIONS OF BATTERY SEGMENTS

ISSUE	DATE	BY
1	12-54	GHH

ES-240053 1ss. SID SUBSCRIBER'S SDR.
NON-ZONE
NON-COIN

TRANSLATION

R2-1
R1-8

PANEL GCO | SEL. TYPE WITH SDR SEL & TRANSL. | OS-223.1(B)

ILL. BELL TEL. CO — PLANT SCHOOL

SEQUENCE CHART

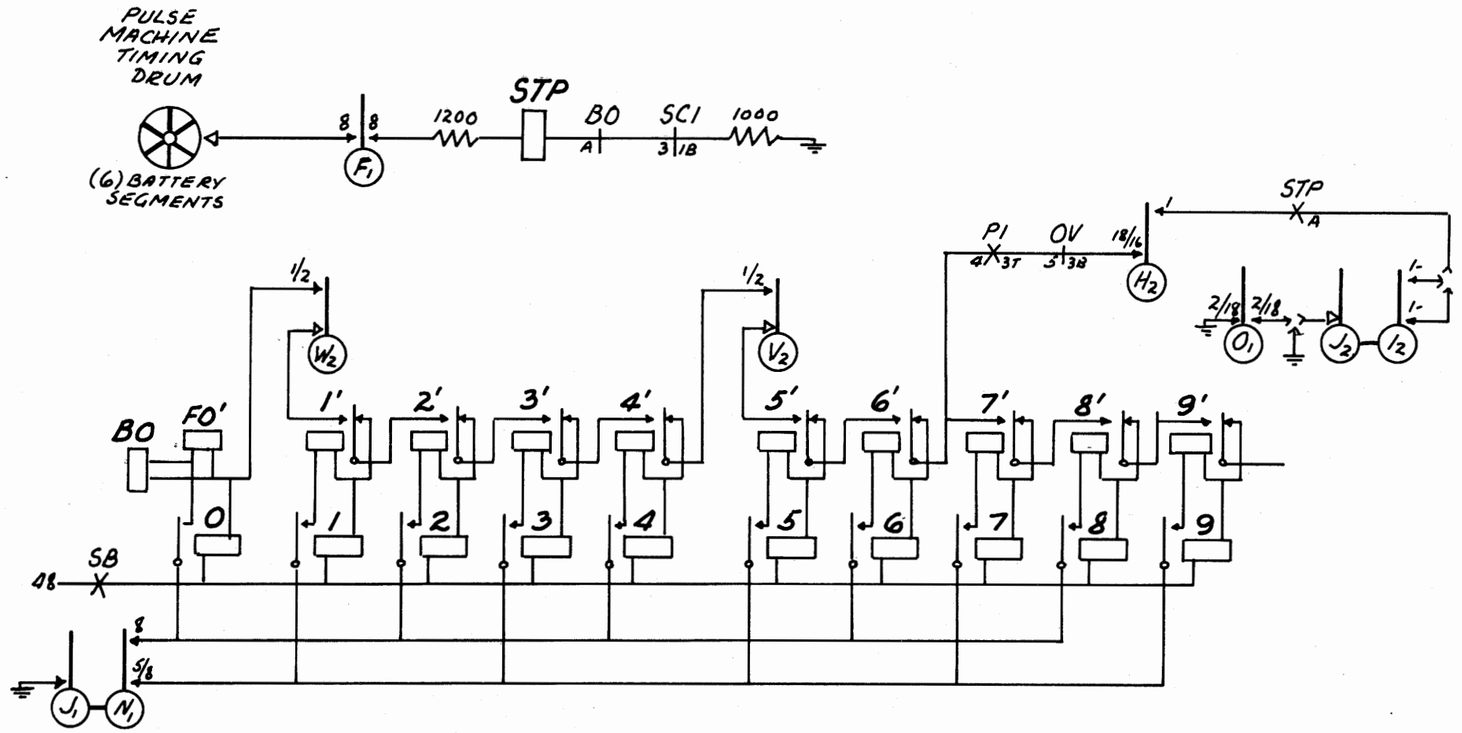

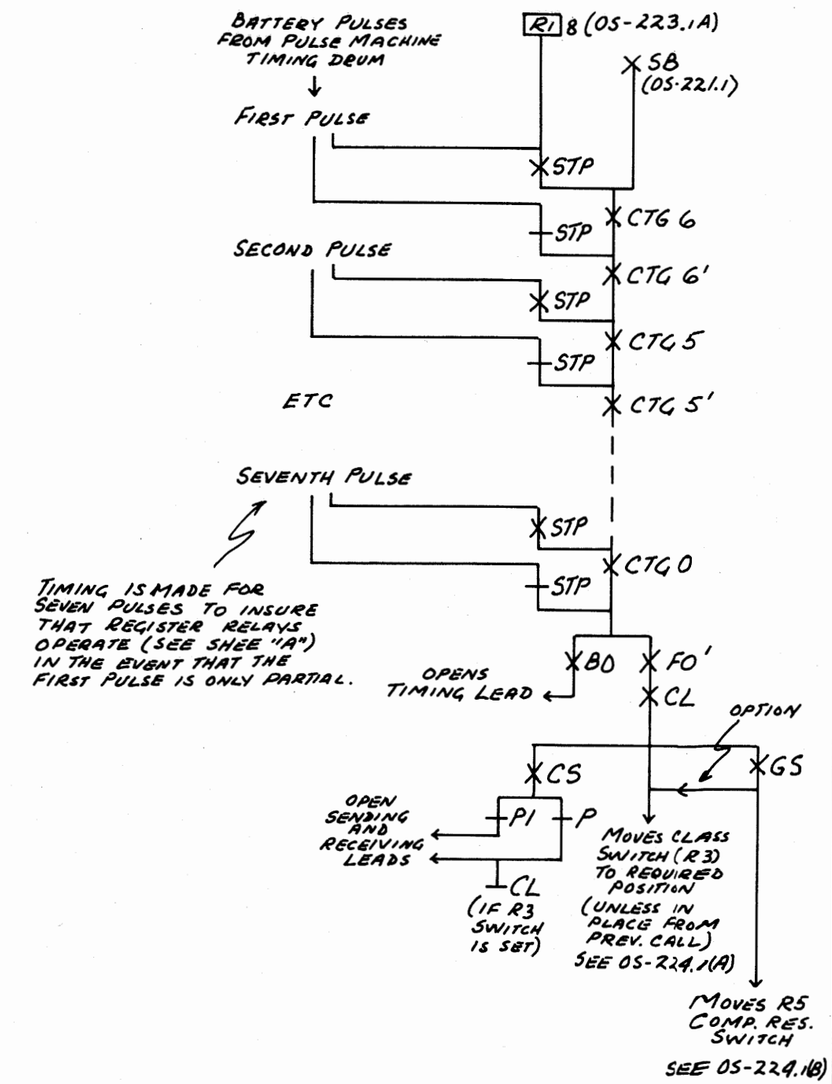

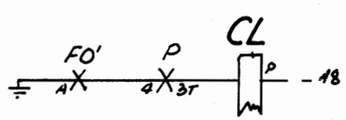

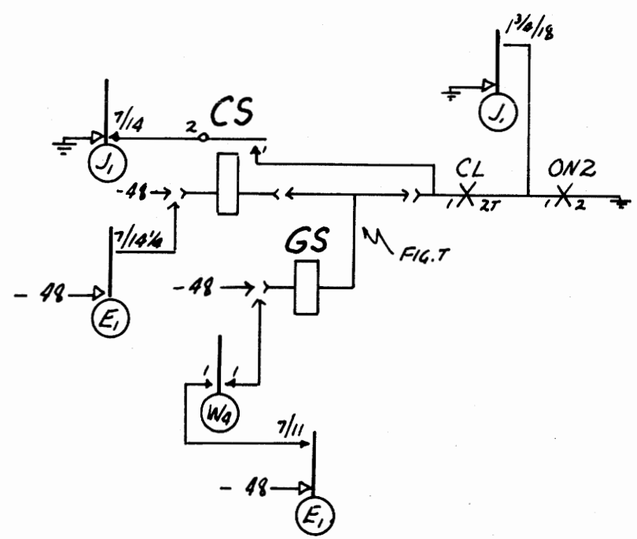

R1 SEQ. SWITCH

8. PULSE COUNT

ES-240053 ISS.5ID SUBSCRIBER'S SENDER NON-ZONE NON-COIN

PULSE COUNT

R2-1
R1-8

PANEL GCO | SEL. TYPE WITH SDR. SEL. & TRANSL. | OS-223.1(C)

ILL. BELL TEL. CO - PLANT SCHOOL

ISSUE	1	
DATE	12-5A	
BY	GHH	

SEQUENCE CHART

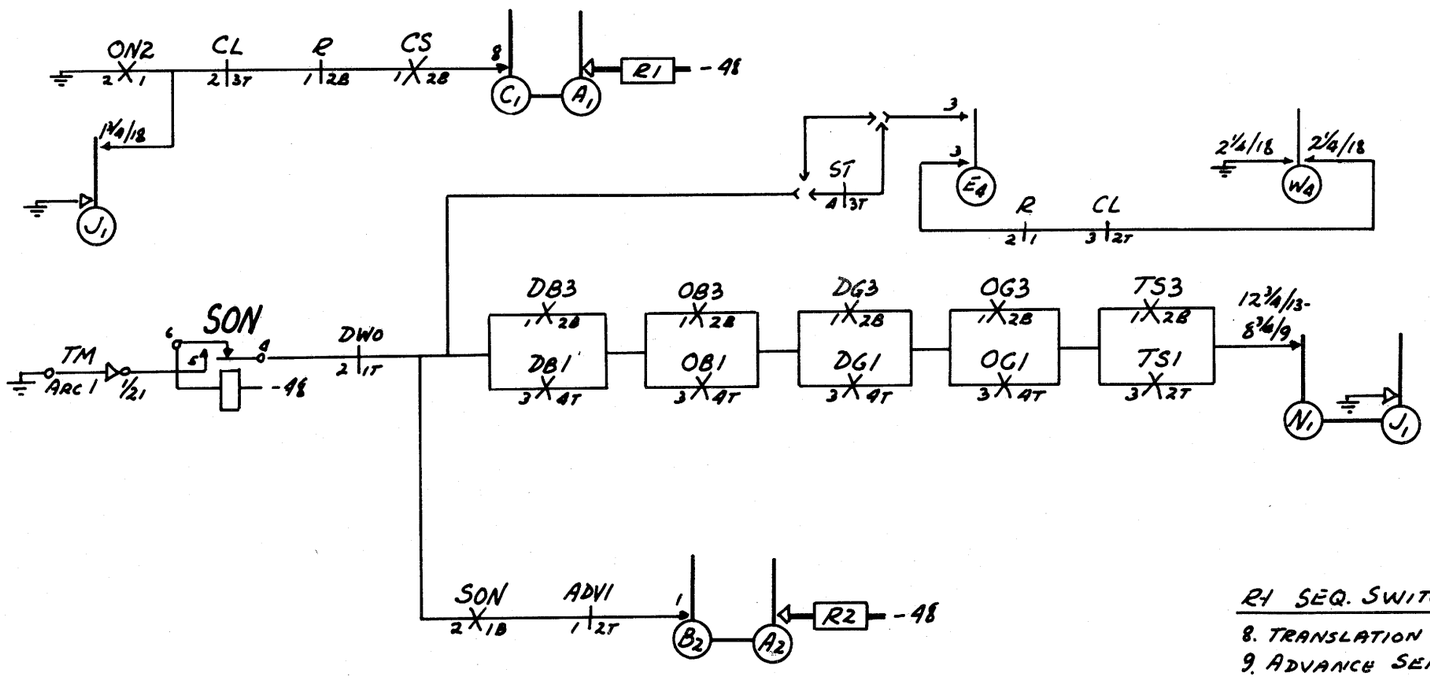

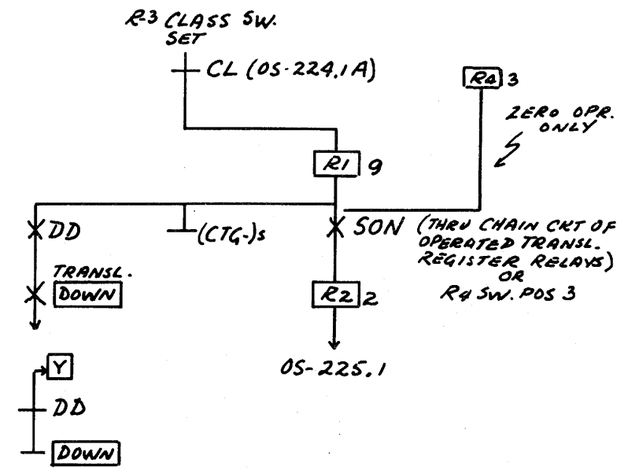

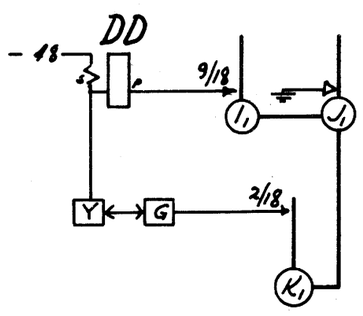

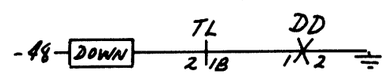

R-1 SEQ. SWITCH

8. TRANSLATION
9. ADVANCE SENDER

R-2 SEQ. SWITCH

1. NORMAL
2. DIST. BRUSH SELECTION

ISSUE	DATE	BY
1	12-54	GHH

ES-240053 Iss. 5D SUBSCRIBER'S SENDER NON-ZONE NON-COIN

CHECK TRANSLATION REGISTER RELAYS — R_2-1 R_1-9

RESTORE TRANSLATOR

PANEL GCO | SEL. TYPE WITH SDR. SEL. & TRANSL. | OS-224.1(D)

ILL. BELL TEL. CO - PLANT SCHOOL

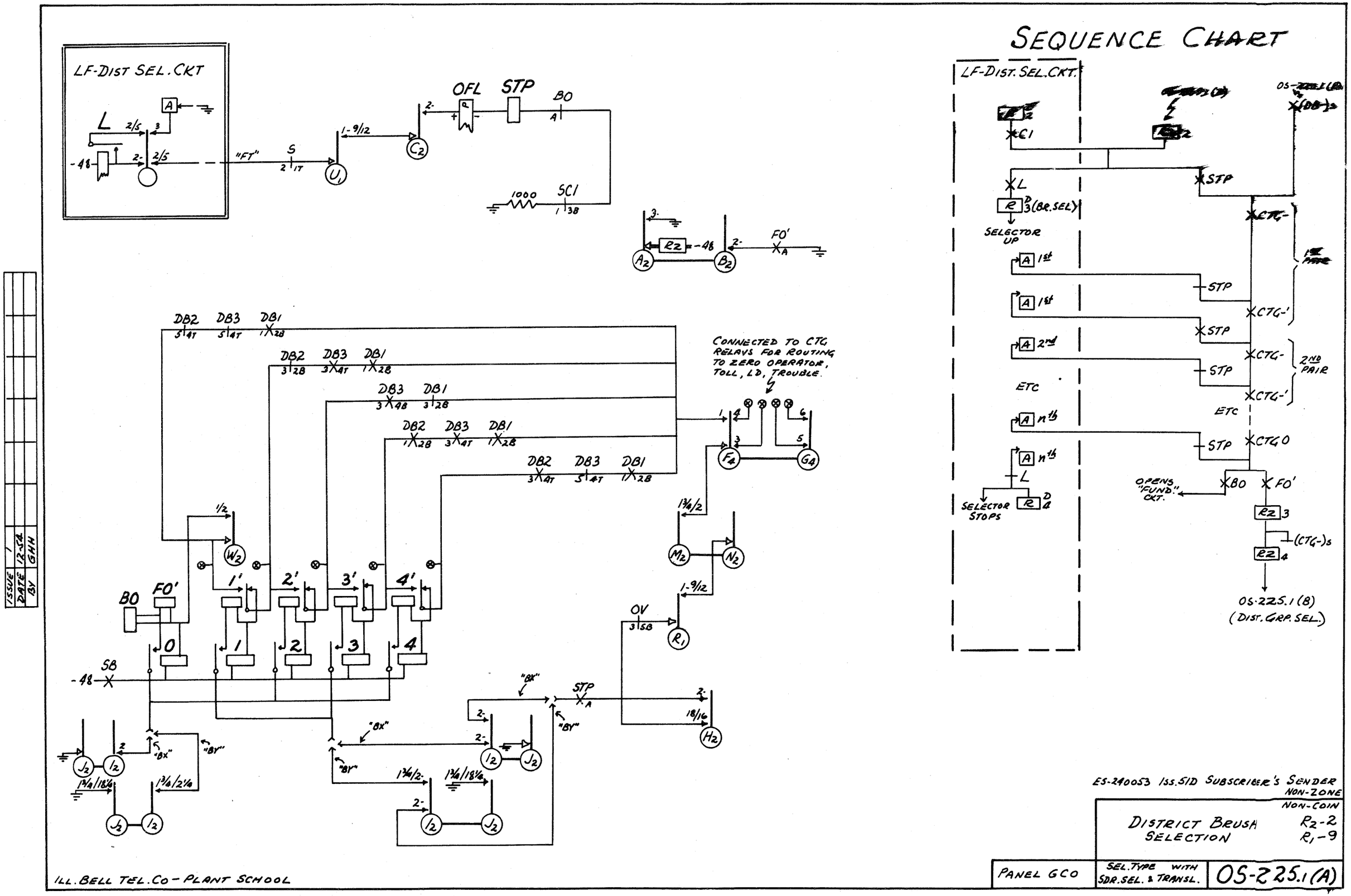
LF-DIST SEL. CKT
L
A
2/5
3
-48
2-
2/5
"FT"
S
2 1T
U1
1-9/12
C2
2-
OFL
STP
BO
A
1000
SC1
1 3B
3-
R2
-48
2-
FO'
A
A2
B2
DB2 3 4T
DB3 5 4T
DB1 1 2B
DB2 3 2B
DB3 3 4T
DB1 1 2B
DB3 3 4B
DB1 3 2B
DB2 1 2B
DB3 3 4T
DB1 1 2B
DB2 3 4T
DB3 5 4T
DB1 1 2B
CONNECTED TO CTG RELAYS FOR ROUTING TO ZERO OPERATOR, TOLL, LD, TROUBLE.
1
4
6
3
5
F4
G4
1/2
W2
1'
2'
3'
4'
BO
FO'
0
1
2
3
4
SB
-48
1 3/4/2
M2
N2
1-9/12
OV
3 5B
R1
"BX"
STP
A
"BY"
2-
18/16
H2
"BX"
"BY"
2
J2
I2
1 3/4/18 1/4
1 3/4/2 1/4
1 3/4/2-
1 3/4/18 1/4
SEQUENCE CHART
LF-DIST. SEL. CKT.
C1
L
R 3 (BR. SEL)
SELECTOR UP
A 1st
A 2nd
ETC
A n th
SELECTOR STOPS
R 2
STP
CTG-
1st PAIR
CTG-'
2ND PAIR
ETC
CTG 0
OPENS "FUND." CKT.
BO
FO'
R2 3
(CTG-)s
R2 4
OS-225.1 (B)
(DIST. GRP. SEL.)
ES-240053 1SS.5ID SUBSCRIBER'S SENDER NON-ZONE NON-COIN
DISTRICT BRUSH SELECTION
R2-2
R1-9
PANEL GCO
SEL. TYPE WITH SDR. SEL. & TRANSL.
OS-225.1 (A)
ILL. BELL TEL. CO - PLANT SCHOOL
ISSUE 1
DATE 12-54
BY GHH

SEQUENCE CHART

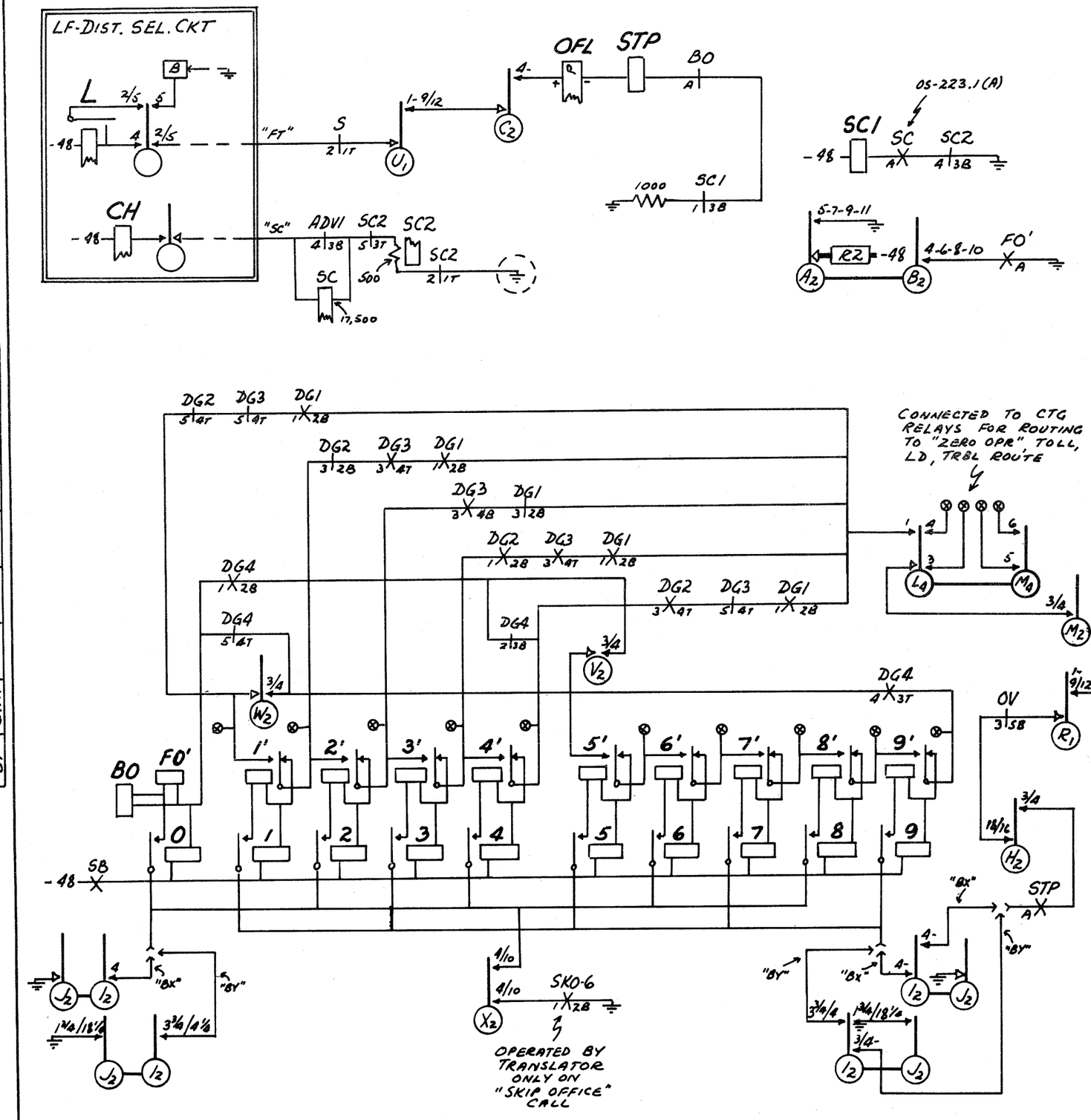

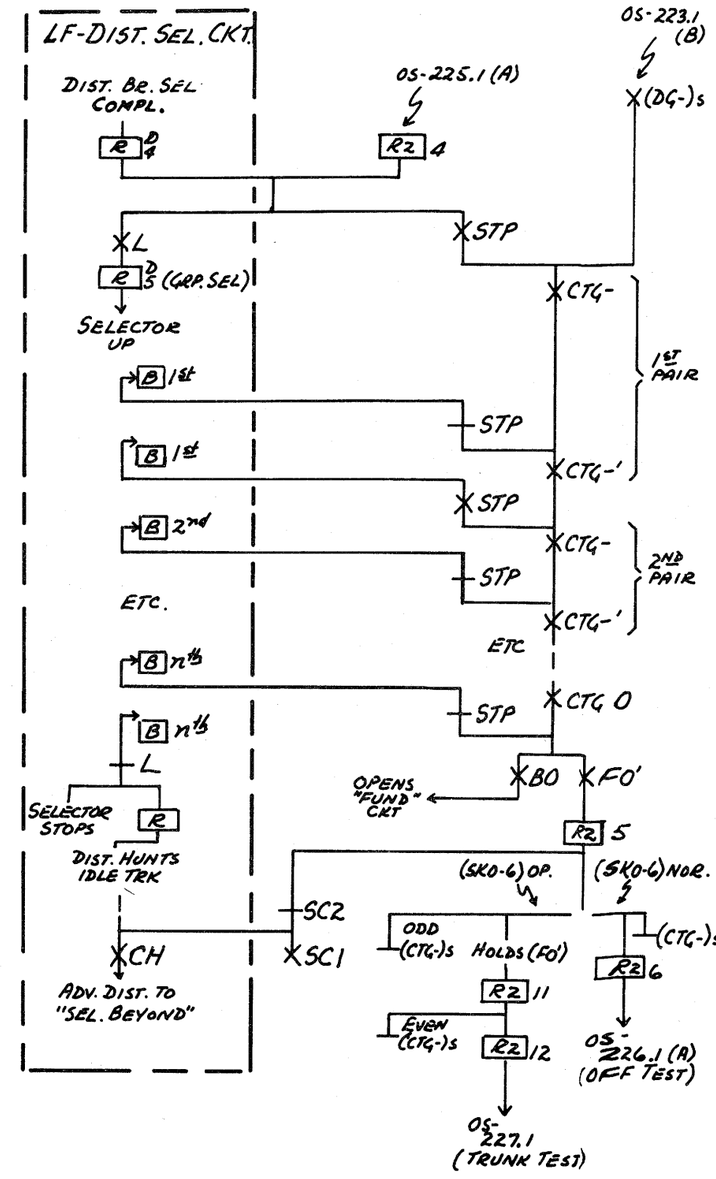

ISSUE	DATE	BY
1	12-54	GHH

ES-240053 Iss.51D SUBSCRIBER'S SENDER
NON-ZONE
NON-COIN

DISTRICT GROUP SELECTION

R_2-4
R_1-9

PANEL GCO	SEL. TYPE WITH SDR. SEL. & TRANSL.	OS-225.1(B)

ILL. BELL TEL. CO - PLANT SCHOOL

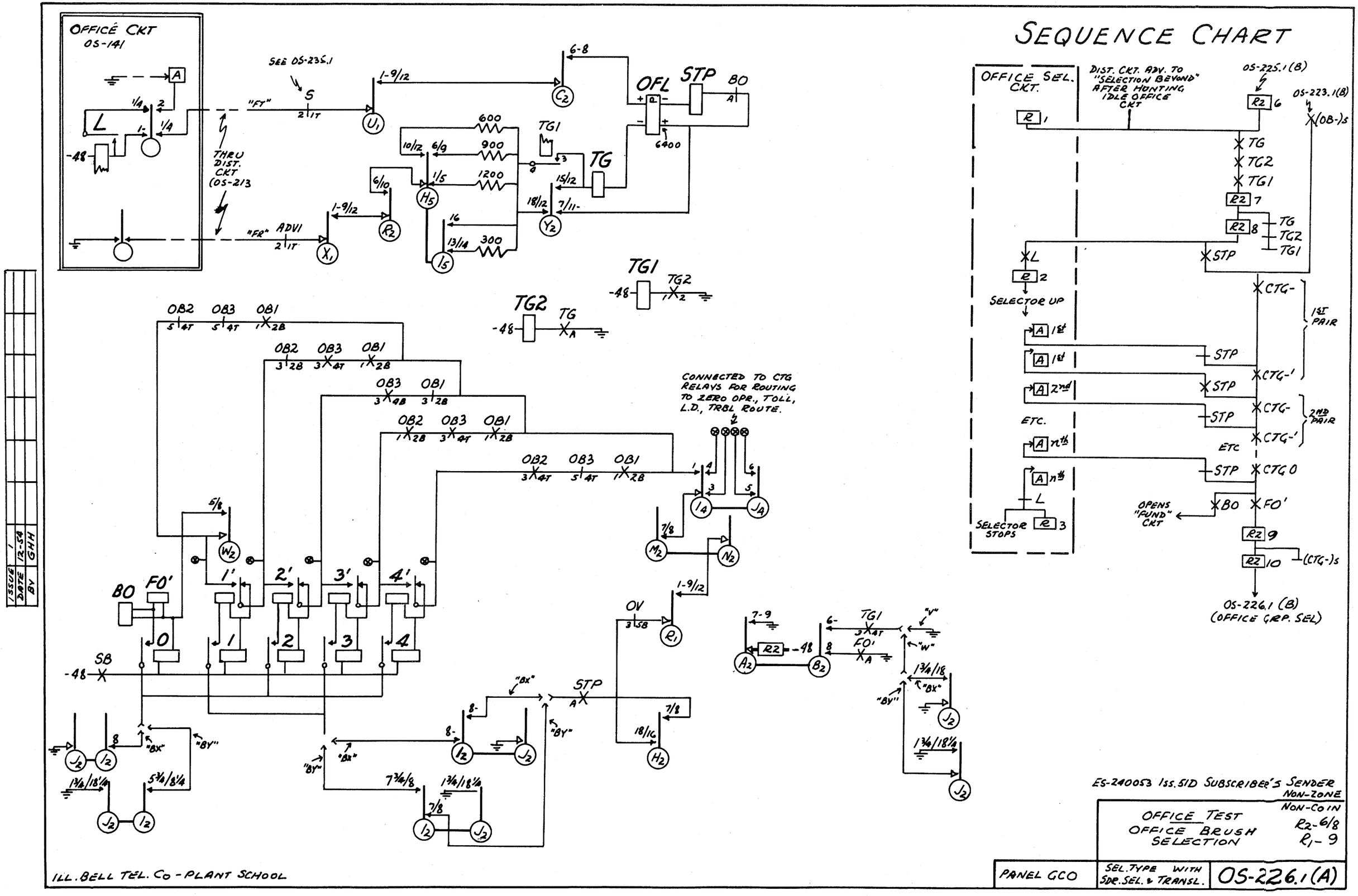
SEQUENCE CHART
OFFICE CKT
OS-141
SEE OS-235.1
THRU DIST. CKT (OS-213
"FT"
"FR"
ADV1
OFL
STP
BO
TG
TG1
TG2
600
900
1200
300
6400
OB2
OB3
OB1
CONNECTED TO CTG RELAYS FOR ROUTING TO ZERO OPR., TOLL, L.D., TRBL ROUTE.
FO'
SB
OV
"BX"
"BY"
"V"
"W"
OFFICE SEL. CKT.
DIST. CKT. ADV. TO "SELECTION BEYOND" AFTER HUNTING IDLE OFFICE CKT
OS-225.1 (B)
OS-223.1 (B)
SELECTOR UP
ETC.
SELECTOR STOPS
CTG-
CTG-'
CTG 0
1ST PAIR
2ND PAIR
OPENS "FUND" CKT
(CTG-)s
OS-226.1 (B)
(OFFICE GRP. SEL)
ES-240053 Iss. 5ID SUBSCRIBER'S SENDER
NON-ZONE
NON-COIN
OFFICE TEST
OFFICE BRUSH SELECTION
R2-6/8
R1-9
PANEL GCO
SEL. TYPE WITH SDR. SEL. & TRANSL.
OS-226.1 (A)
ILL. BELL TEL. CO - PLANT SCHOOL
ISSUE 1
DATE 12-54
BY GHH

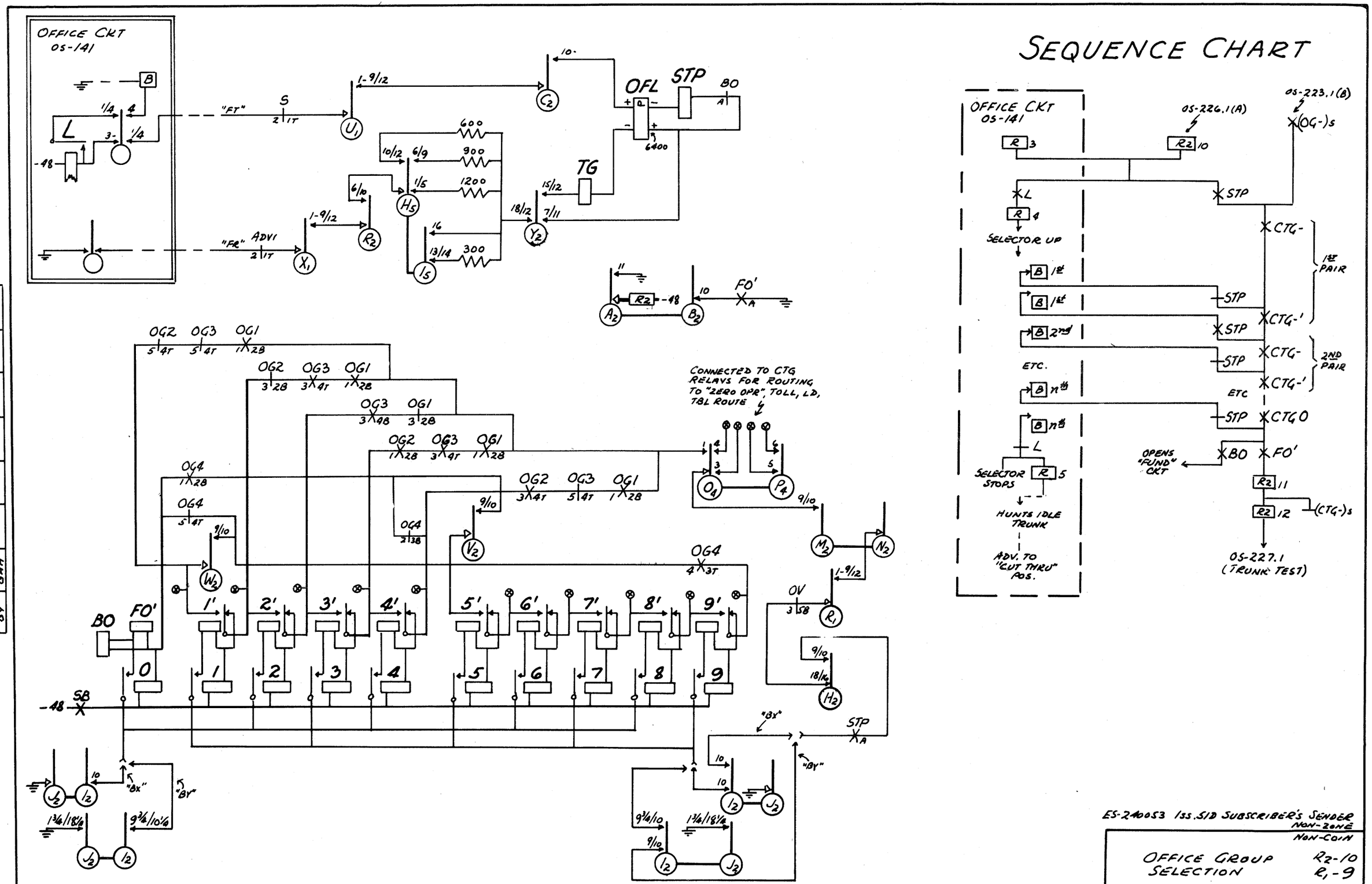
OFFICE CKT
OS-141
"FT"
"FR"
ADV1
OFL
STP
TG
BO
FO'
-48
SB
OG1
OG2
OG3
OG4
CONNECTED TO CTG RELAYS FOR ROUTING TO "ZERO OPR", TOLL, LD, TBL ROUTE
"BX"
"BY"
OV
SEQUENCE CHART
OFFICE CKT
OS-141
OS-226.1(A)
OS-223.1(B)
(OG-)s
SELECTOR UP
SELECTOR STOPS
HUNTS IDLE TRUNK
ADV. TO "CUT THRU" POS.
CTG-
CTG-'
CTG 0
1ST PAIR
2ND PAIR
ETC.
OPENS "FUND" CKT
(CTG-)s
OS-227.1
(TRUNK TEST)
ES-240053 1ss.SID SUBSCRIBER'S SENDER
NON-ZONE
NON-COIN
OFFICE GROUP SELECTION
R2-10
R1-9
PANEL GCO
SEL. TYPE WITH SDR. SEL. & TRANSL.
OS-226.1(B)
ILL. BELL TEL. CO - PLANT SCHOOL
ISSUE 1
DATE 12-54
BY GHH

SEQUENCE CHART

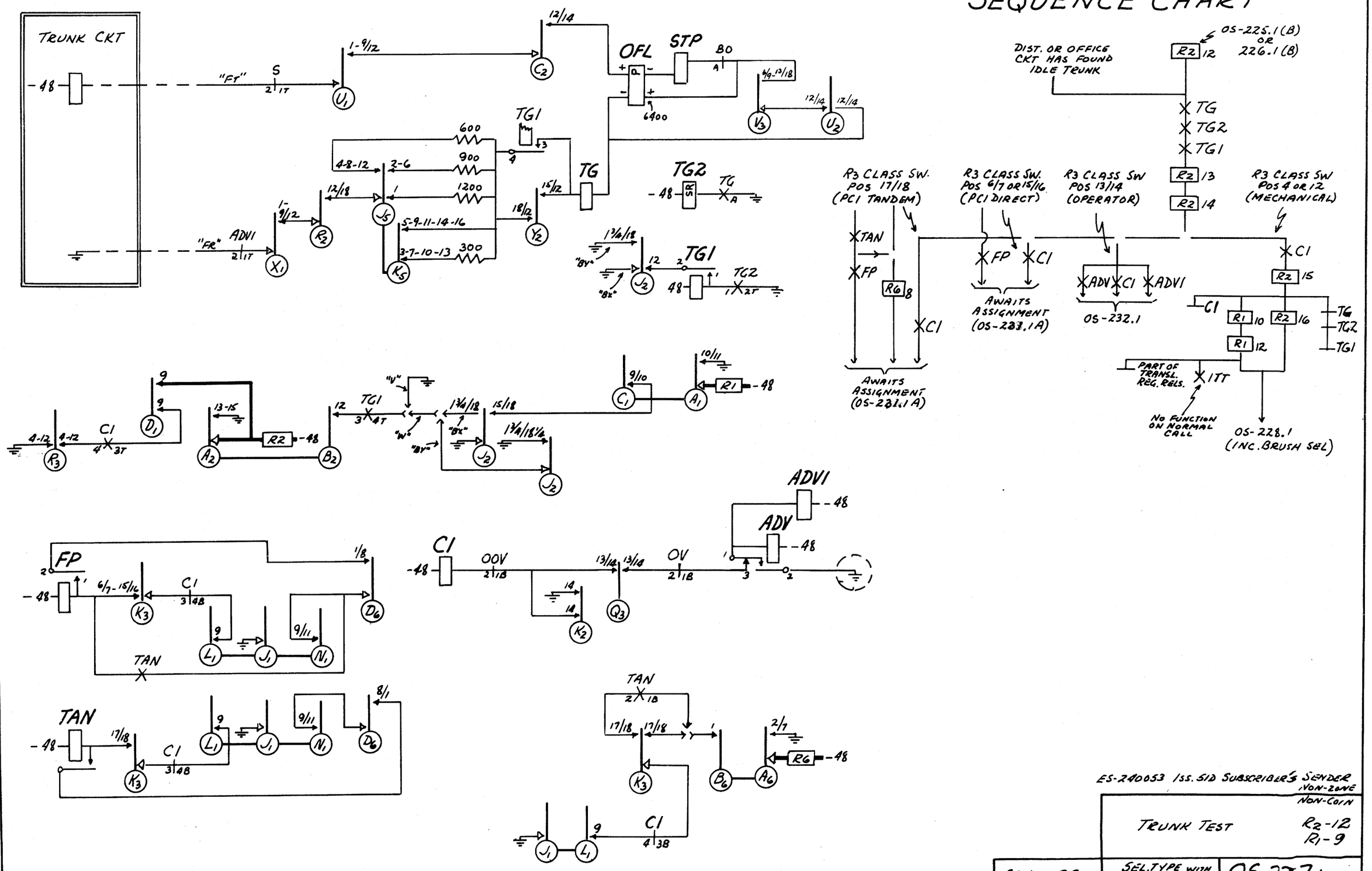

ES-240053 1SS. SID SUBSCRIBER'S SENDER NON-ZONE NON-COIN

TRUNK TEST		R2-12 R1-9
PANEL GCO	SEL. TYPE WITH SDR. SEL & TRANSL.	OS-227.1

ISSUE	1	
DATE	12-52	
BY	GHH	

ILL. BELL TEL. CO - PLANT SCHOOL

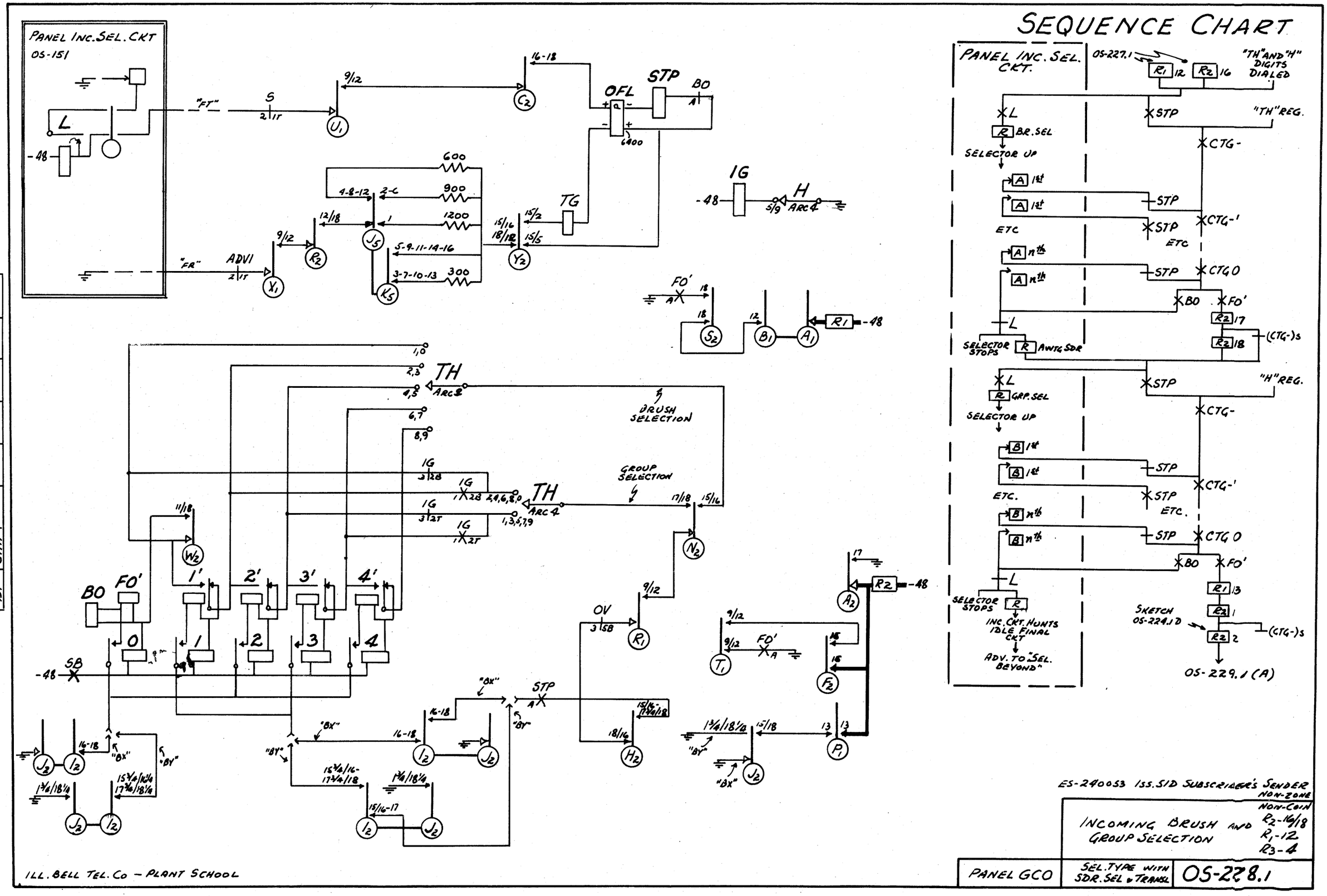
SEQUENCE CHART
PANEL INC. SEL. CKT
OS-151
"FT"
"FR"
ADV1
OFL
STP
TG
IG
TH
ARC 4
ARC 2
BRUSH SELECTION
GROUP SELECTION
PANEL INC. SEL. CKT.
OS-227.1
"TH" AND "H" DIGITS DIALED
"TH" REG.
"H" REG.
BR. SEL
SELECTOR UP
ETC
SELECTOR STOPS
AWTG SDR
GRP. SEL
INC. CKT. HUNTS IDLE FINAL CKT
ADV. TO "SEL. BEYOND"
SKETCH OS-224.1 D
OS-229.1 (A)
ES-240053 ISS. S1D SUBSCRIBER'S SENDER NON-ZONE
NON-COIN
R2-16/18
R1-12
R3-4
INCOMING BRUSH AND GROUP SELECTION
PANEL GCO
SEL. TYPE WITH SDR. SEL & TRANSL
OS-228.1
ILL. BELL TEL. CO — PLANT SCHOOL
ISSUE 1
DATE 12-54
BY GHH

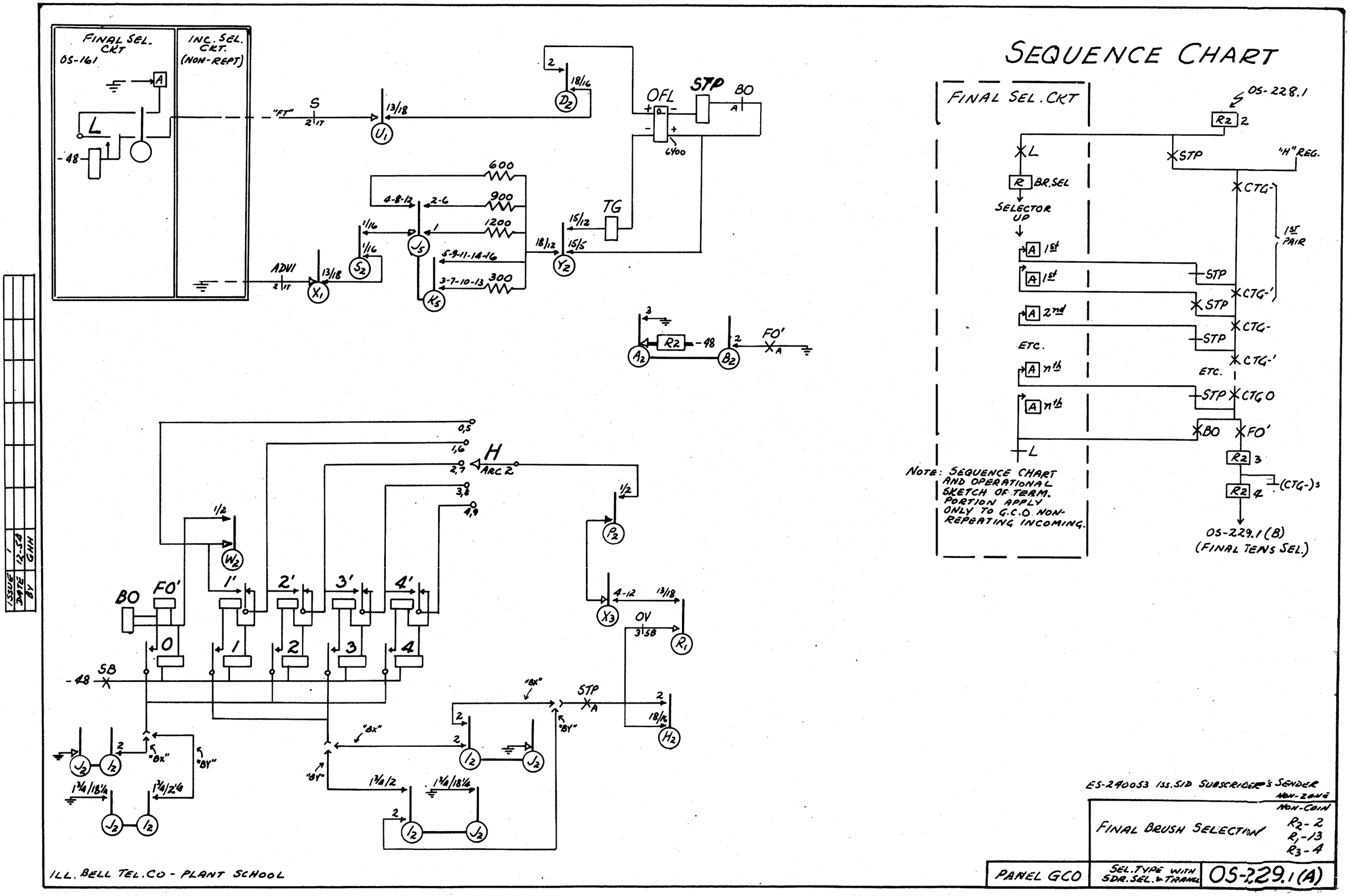
FINAL SEL. CRT
OS-161
INC. SEL. CRT. (NON-REPT)
"FT"
S
ADVI
OFL
STP
BO
TG
600
900
1200
300
6400
FO'
SB
"BX"
"BY"
H
ARC 2
OV
ILL. BELL TEL. CO - PLANT SCHOOL
SEQUENCE CHART
FINAL SEL. CRT
OS-228.1
"H" REG.
BR. SEL
SELECTOR UP
1st PAIR
ETC.
NOTE: SEQUENCE CHART AND OPERATIONAL SKETCH OF TERM. PORTION APPLY ONLY TO G.C.O. NON-REPEATING INCOMING.
OS-229.1 (B)
(FINAL TENS SEL.)
ES-240053 ISS. S1D SUBSCRIBER'S SENDER
NON-ZONE
NON-COIN
FINAL BRUSH SELECTION
R2-2
R1-13
R3-4
PANEL GCO
SEL. TYPE WITH SDR. SEL. & TRANS.
OS-229.1 (A)
ISSUE 1
DATE 12-54
BY GHH

SEQUENCE CHART

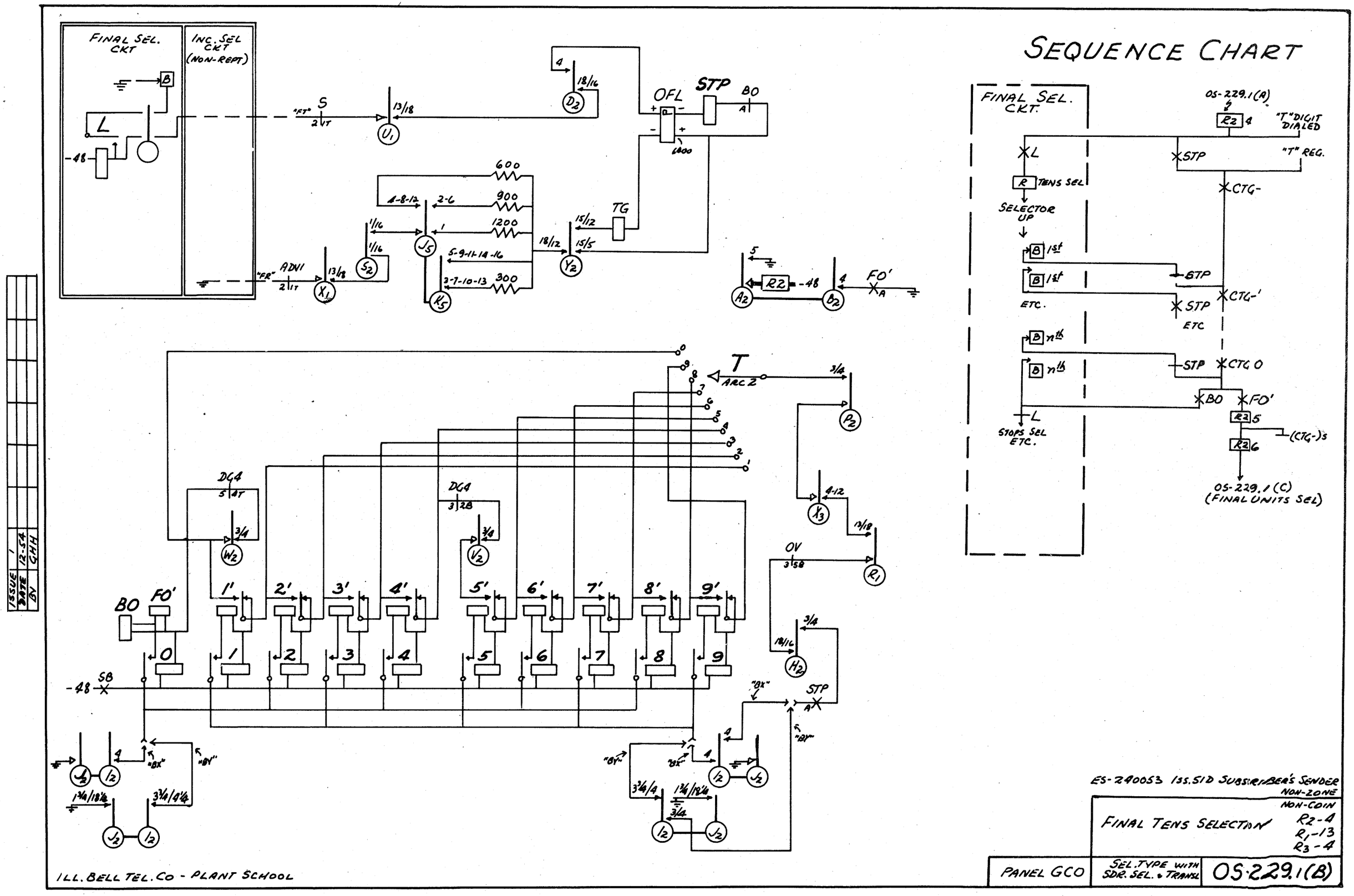

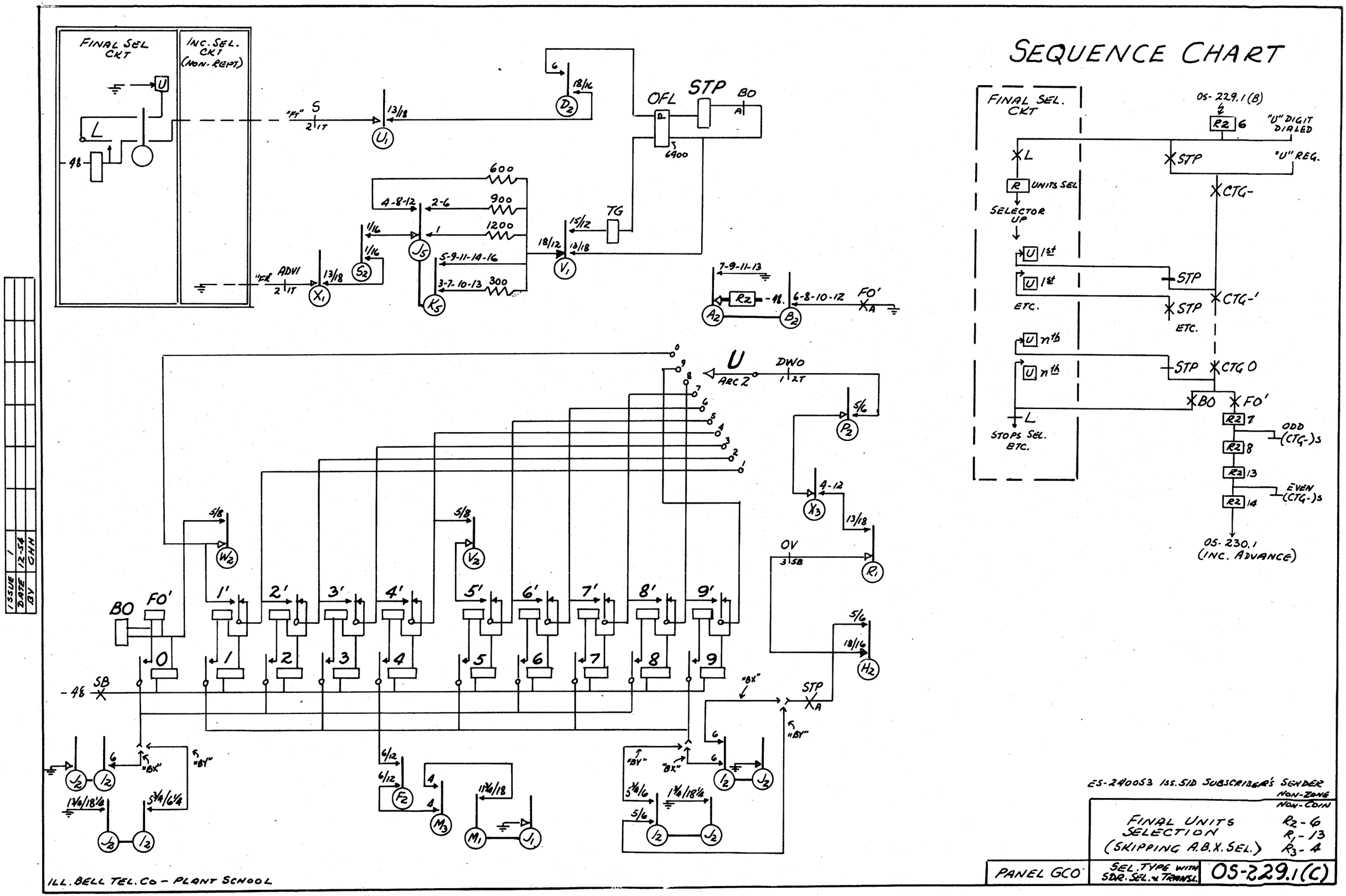
SEQUENCE CHART
FINAL SEL CKT
INC. SEL. CKT (NON-REPT)
FINAL SEL. CKT
OS-229.1(B)
"U" DIGIT DIALED
"U" REG.
UNITS SEL
SELECTOR UP
STOPS SEL. ETC.
ETC.
CTG-
CTG-'
CTG 0
ODD (CTG-)s
EVEN (CTG-)s
OS-230.1 (INC. ADVANCE)
OFL
STP
BO
FO'
TG
OV
ADV1
"FT"
"FL"
-48
SB
"BX"
"BY"
ARC 2
DWO
ES-240053 ISS.5ID SUBSCRIBER'S SENDER
NON-ZONE
NON-COIN
FINAL UNITS SELECTION (SKIPPING A.B.X. SEL.)
R2-6
R1-13
R3-4
PANEL GCO
SEL. TYPE WITH SDR. SEL. & TRANSL.
OS-229.1(C)
ILL. BELL TEL. CO - PLANT SCHOOL
ISSUE 1
DATE 12-54
BY GHH

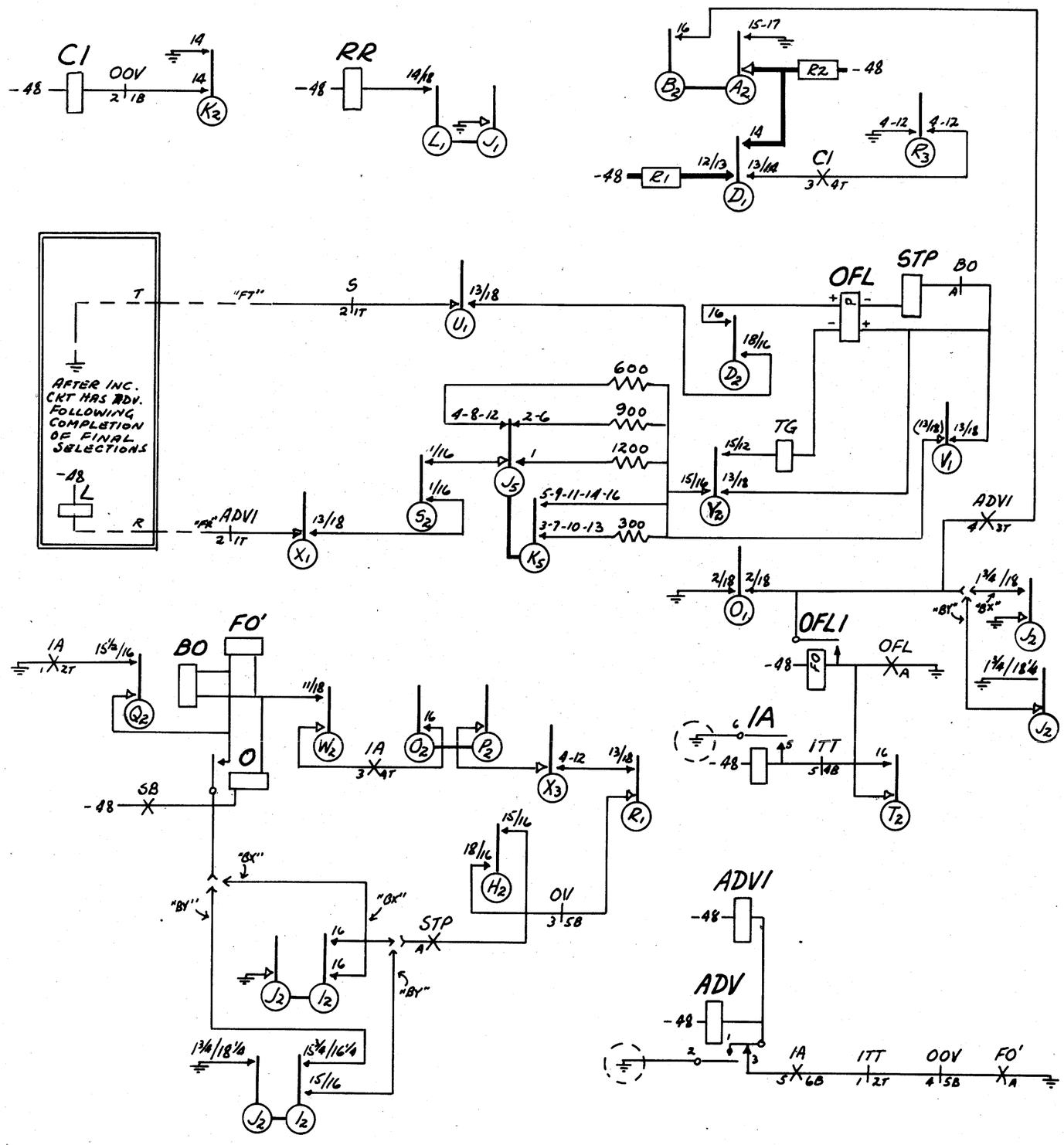

SEQUENCE CHART

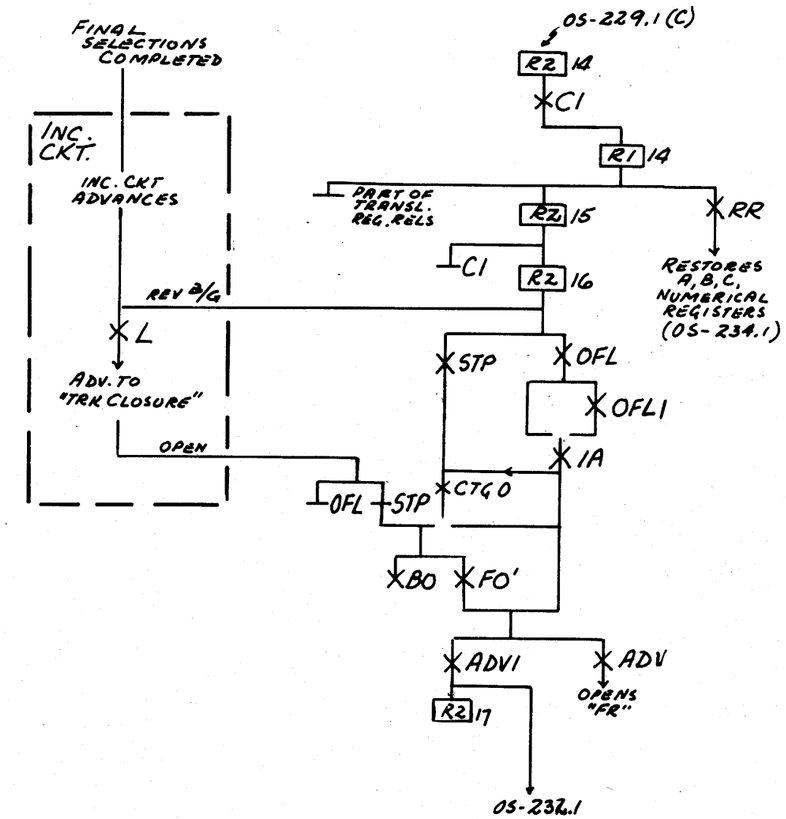

ES-240053 Iss. 5ID SUBSCRIBER'S SENDER
NON-ZONE
NON-COIN

INCOMING ADVANCE

R2-16
R1-14
R3-4

PANEL GCO	SEL. TYPE WITH SDR. SEL. & TRANSL.	OS-230.1

ILL. BELL TEL. CO — PLANT SCHOOL

ISSUE	1
DATE	12-54
BY	GHH

SEQUENCE CHART

TRUNK RELAY OPERATED IN SERIES WITH (TG) RELAY DURING TRUNK TEST CAUSES TRUNK TO BE "ASSIGNED" (TIP AND RING MOMENTARILY OPENED), MANUALLY OR AUTOMATICALLY, WHEN "B" OPERATOR IS READY TO HANDLE CALL.

"LIGHT" OR "HEAVY" BATTERY PULSES ARE SENT OVER "FT" ("POSITIVE" PULSES) OR "FR" ("NEGATIVE" PULSES) TO OPERATE POLARIZED AND MARGINAL RELAYS AT PC1 "B" BOARD WHICH WILL CAUSE CALLED NUMBER TO BE DISPLAYED ON "CALL INDICATOR".

(SEE SHEETS B AND C FOR PULSE CHART AND OPERATIONAL SKETCHES.)

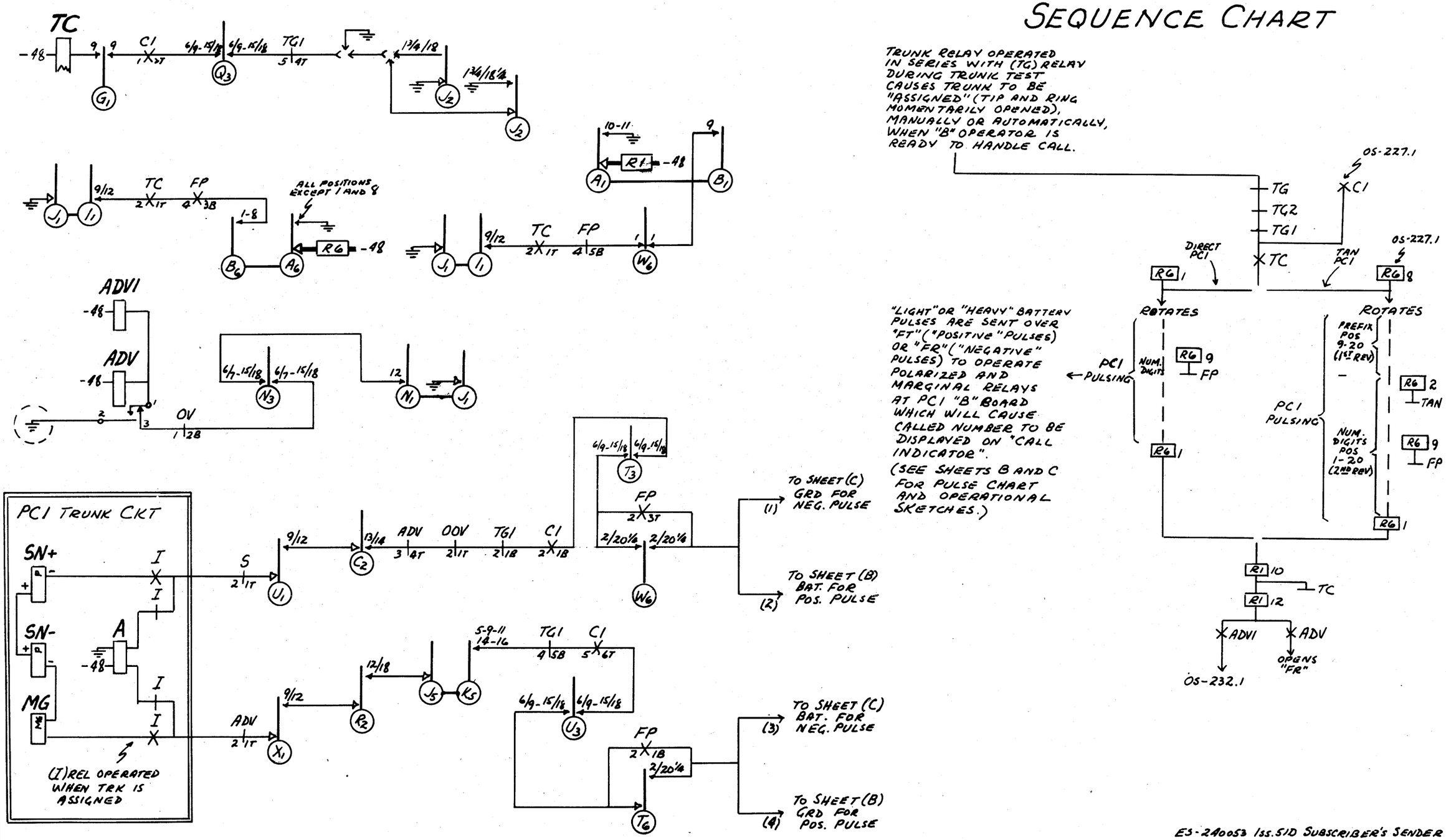

ES-240053 Iss.5ID SUBSCRIBER'S SENDER NON-ZONE NON-COIN

PC1 PULSING
FUNDAMENTAL CIRCUIT

R2-14
R1-9

PANEL GCO

SEL. TYPE WITH SDR. SEL. & TRANSL.

OS-231.1(A)

ILL. BELL TEL. CO - PLANT SCHOOL

ISSUE	DATE	BY
1	12-54	GHH

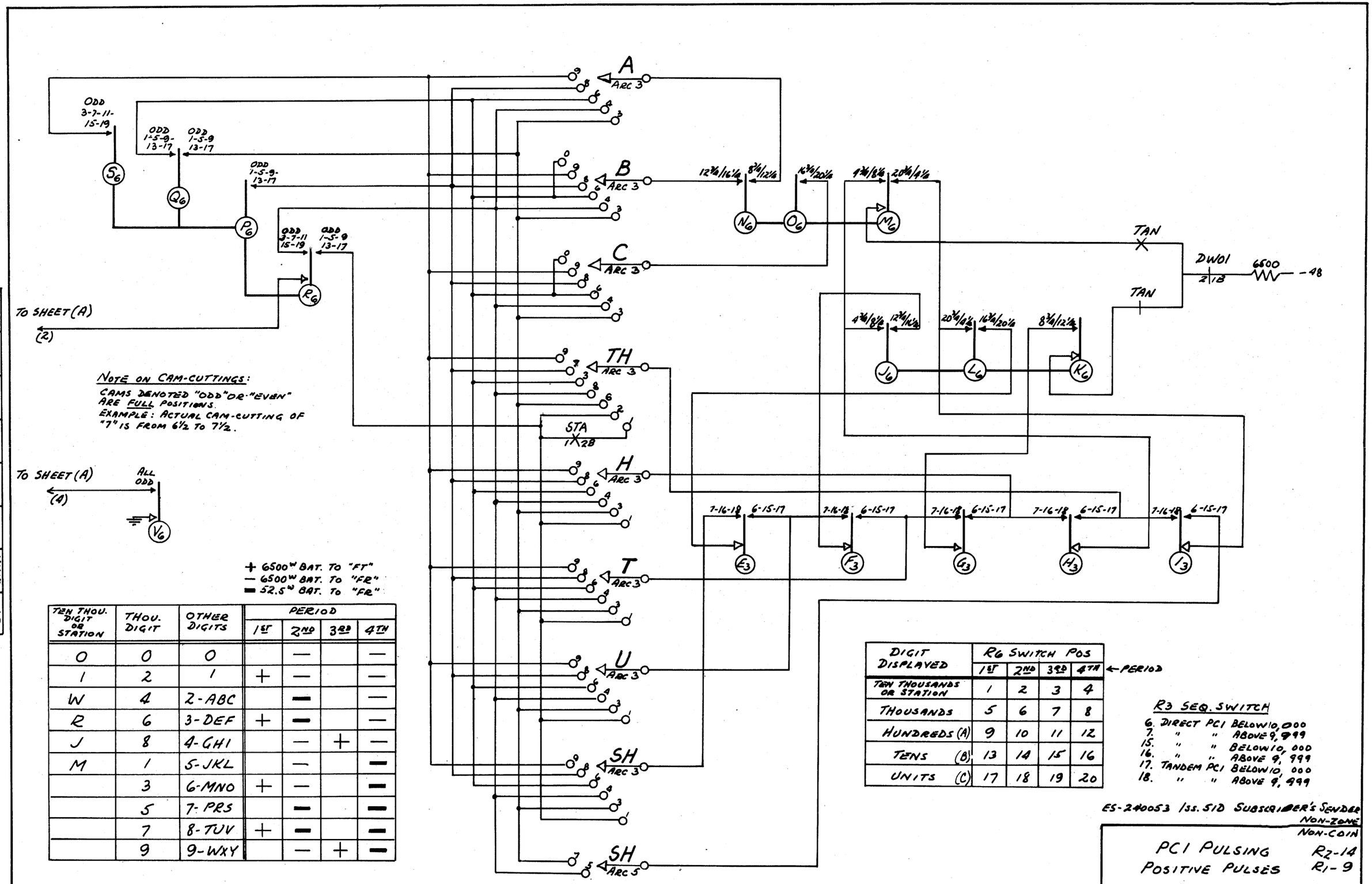

NOTE ON CAM-CUTTINGS:
CAMS DENOTED "ODD" OR "EVEN" ARE FULL POSITIONS.
EXAMPLE: ACTUAL CAM-CUTTING OF "7" IS FROM 6½ TO 7½.

+ 6500W BAT. TO "FT"
— 6500W BAT. TO "FR"
▬ 52.5W BAT. TO "FR"

TEN THOU. DIGIT OR STATION	THOU. DIGIT	OTHER DIGITS	PERIOD 1ST	2ND	3RD	4TH
0	0	0		—		—
1	2	1	+	—		—
W	4	2-ABC		▬		—
R	6	3-DEF	+	▬		—
J	8	4-GHI		—	+	—
M	1	5-JKL		—		▬
	3	6-MNO	+	—		▬
	5	7-PRS		▬		▬
	7	8-TUV	+	▬		▬
	9	9-WXY		—	+	▬

DIGIT DISPLAYED	R6 SWITCH POS 1ST	2ND	3RD	4TH ← PERIOD
TEN THOUSANDS OR STATION	1	2	3	4
THOUSANDS	5	6	7	8
HUNDREDS (A)	9	10	11	12
TENS (B)	13	14	15	16
UNITS (C)	17	18	19	20

R3 SEQ. SWITCH

6. DIRECT PC1 BELOW 10,000
7. " " ABOVE 9,999
15. " " BELOW 10,000
16. " " ABOVE 9,999
17. TANDEM PC1 BELOW 10,000
18. " " ABOVE 9,999

ES-240053 /3S.51D SUBSCRIBER'S SENDER
NON-ZONE
NON-COIN

PC1 PULSING
POSITIVE PULSES

R2-14
R1-9

ISSUE	DATE	BY
1	12-5-58	GHH.

ILL. BELL TEL. CO - PLANT SCHOOL

PANEL GCO | SEL. TYPE WITH SDR. SEL. & TRANSL. | OS-231.1 (B)

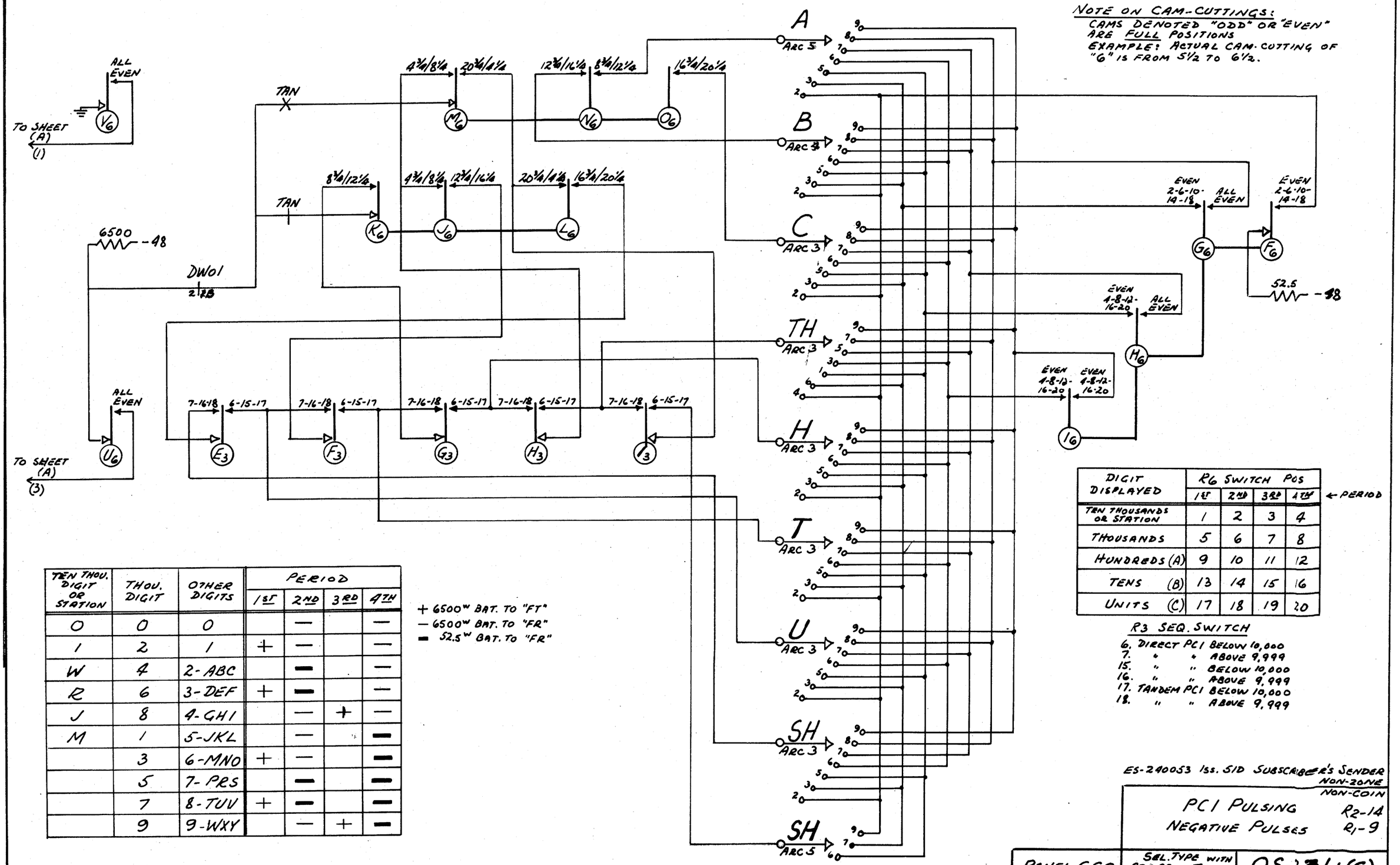

DIGIT DISPLAYED	R6 SWITCH POS 1ST	2ND	3RD	4TH ← PERIOD
TEN THOUSANDS OR STATION	1	2	3	4
THOUSANDS	5	6	7	8
HUNDREDS (A)	9	10	11	12
TENS (B)	13	14	15	16
UNITS (C)	17	18	19	20

R3 SEQ. SWITCH

6. DIRECT PC1 BELOW 10,000
7. " " ABOVE 9,999
15. " " BELOW 10,000
16. " " ABOVE 9,999
17. TANDEM PC1 BELOW 10,000
18. " " ABOVE 9,999

TEN THOU. DIGIT OR STATION	THOU. DIGIT	OTHER DIGITS	PERIOD 1ST	2ND	3RD	4TH
0	0	0		—		—
1	2	1	+	—		—
W	4	2-ABC		▬		—
R	6	3-DEF	+	▬		—
J	8	4-GHI		—	+	—
M	1	5-JKL		—		▬
	3	6-MNO	+	—		▬
	5	7-PRS		▬		▬
	7	8-TUV	+	▬		▬
	9	9-WXY		—	+	▬

+ 6500W BAT. TO "FT"
— 6500W BAT. TO "FR"
▬ 52.5W BAT. TO "FR"

ISSUE	DATE	BY
1	12-52	GHH

ES-240053 Iss. 5ID SUBSCRIBER'S SENDER NON-ZONE NON-COIN

PC1 PULSING R2-14
NEGATIVE PULSES R1-9

PANEL GCO | SEL. TYPE WITH SDR. SEL. & TRANSL. | OS-231.1(C)

ILL. BELL TEL. CO - PLANT SCHOOL

SEQUENCE CHART

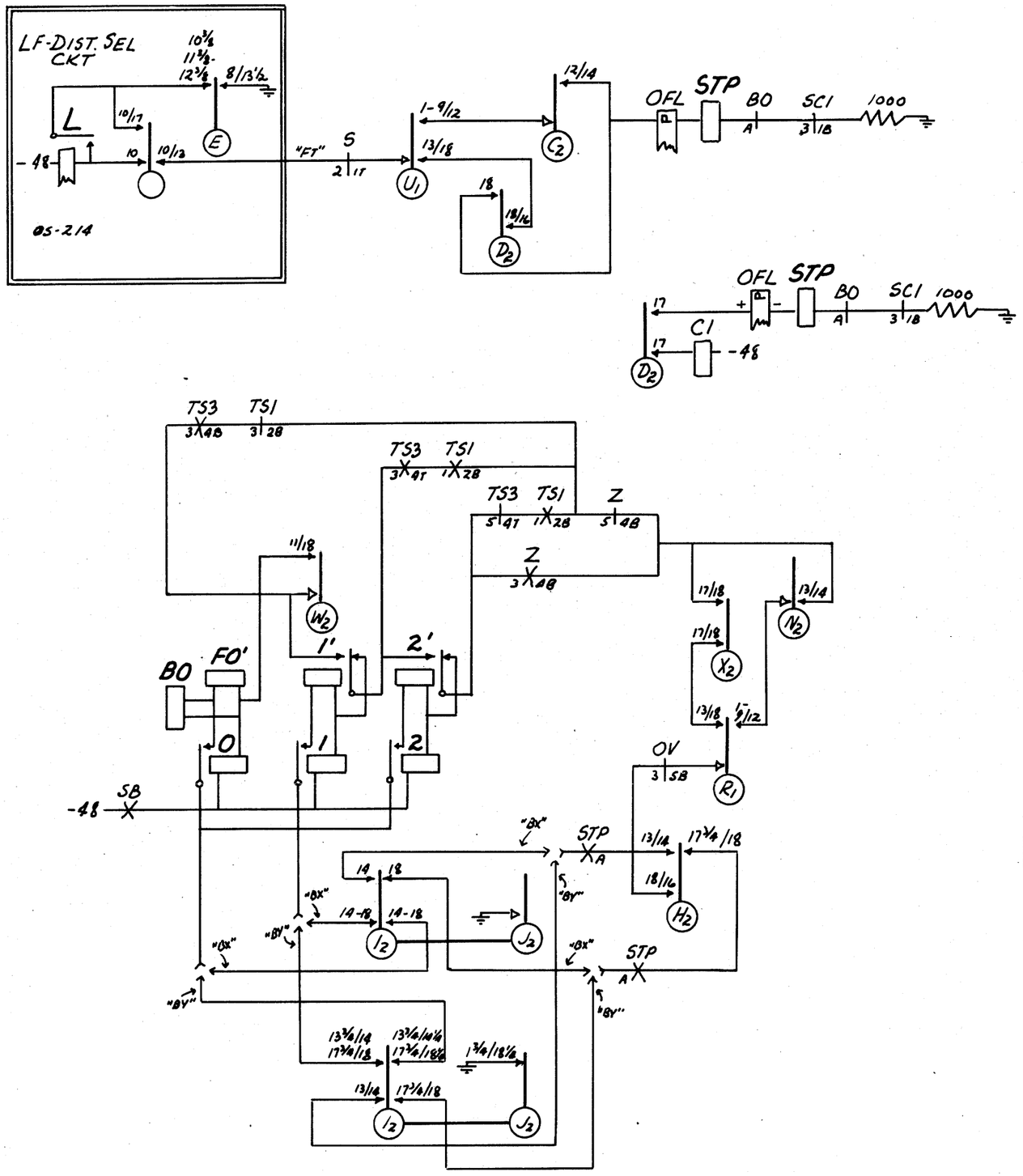

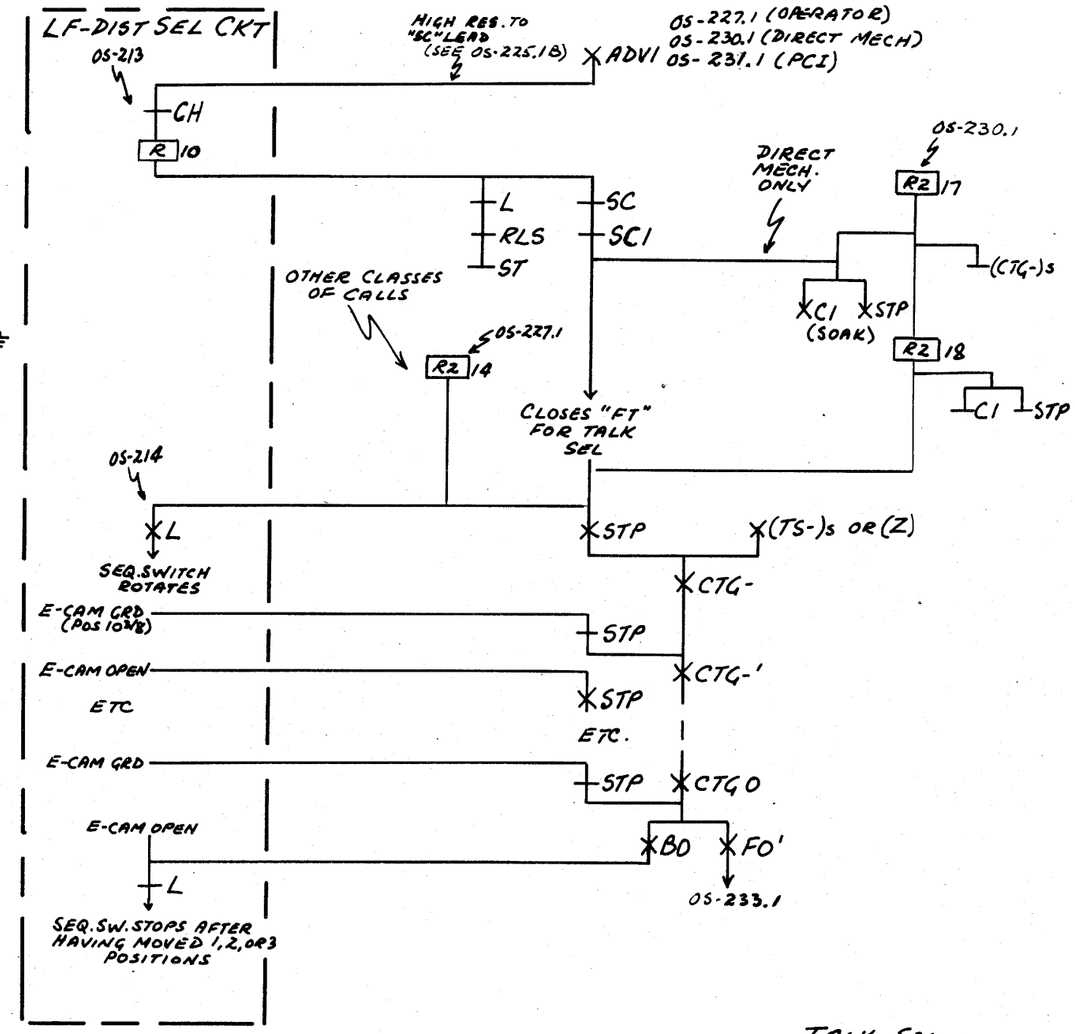

TALK SEL.

CLASS OF CALL	R2 SW. POS.	R1 SW POS
ZERO OPR.	14	1
3-DIGIT OPR.	14	9
PCI	14	12
DIRECT MECH.	18	14

ES-240053 Iss. 5D SUBSCRIBER'S SENDER
NON-ZONE
NON-COIN

TALK SELECTION

PANEL GCO	SEL. TYPE WITH SDR. SEL. TRANSL.	OS 232.1

13316	1
DATE	12-58
BY	GHH

ILL. BELL TEL. CO — PLANT SCHOOL

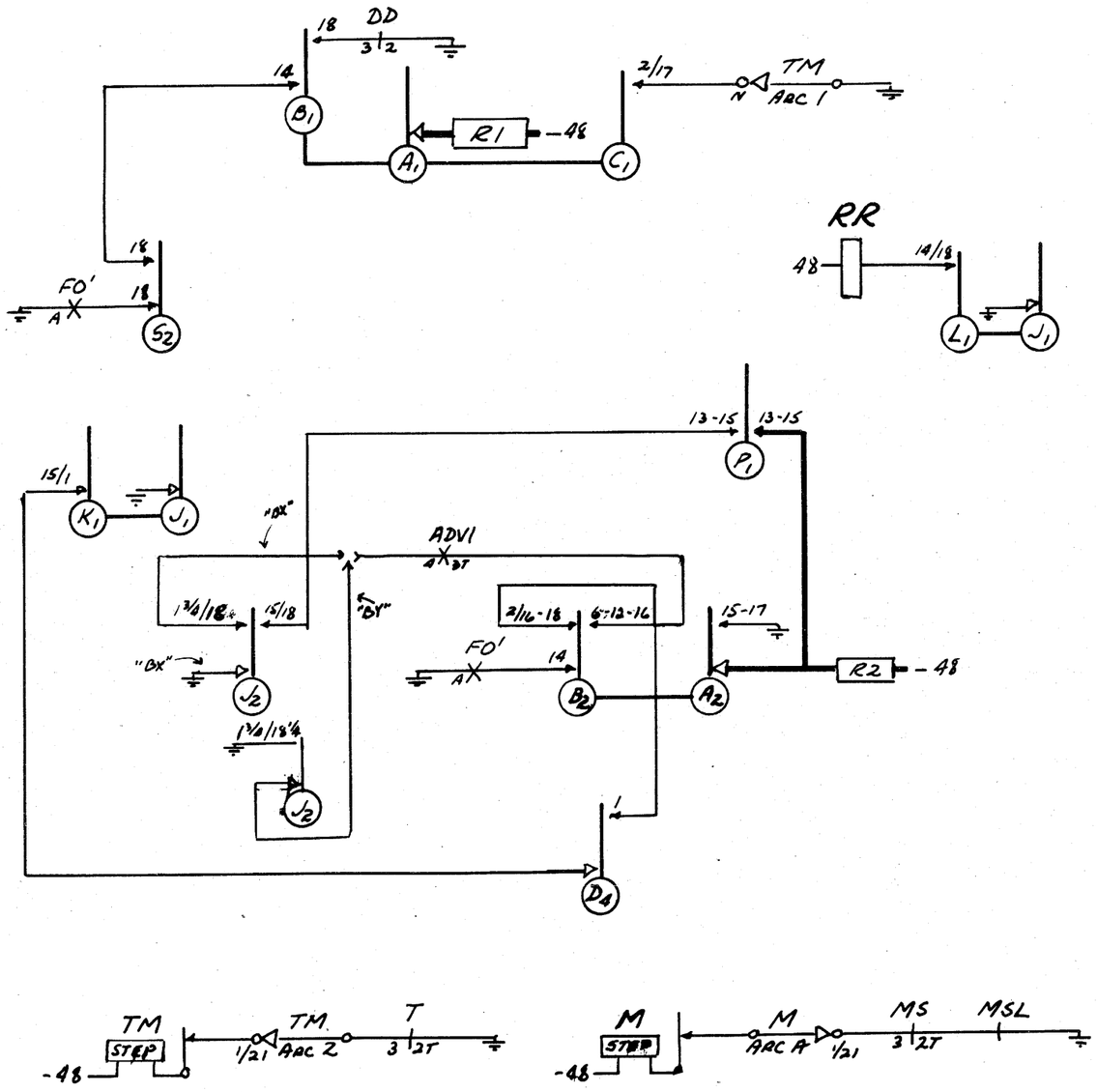

SEQUENCE CHART

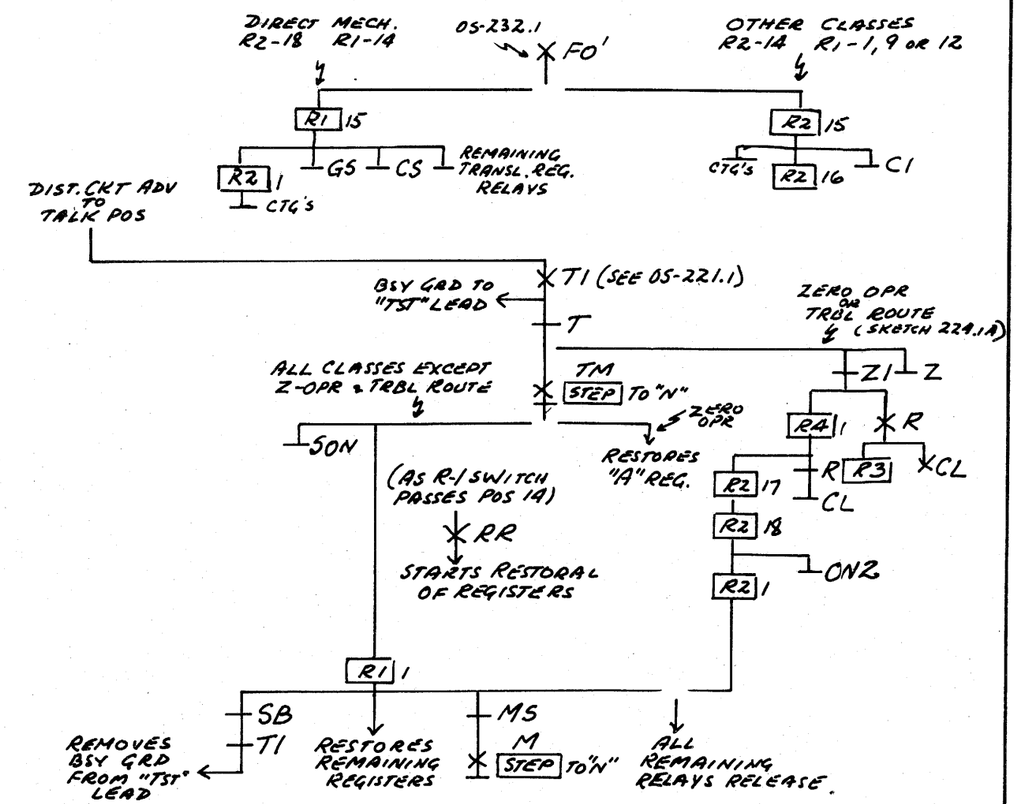

ISSUE	DATE	BY
1	12-54	GHH

ES-240053 - 1ss 15D SUBSCRIBER'S SENDER NON-ZONE NON-COIN

SENDER RELEASE

PANEL GCO	SEL. TYPE WITH SDR. SEL. & TRANSL.	OS-233.1

ILL. BELL TEL. CO — PLANT SCHOOL

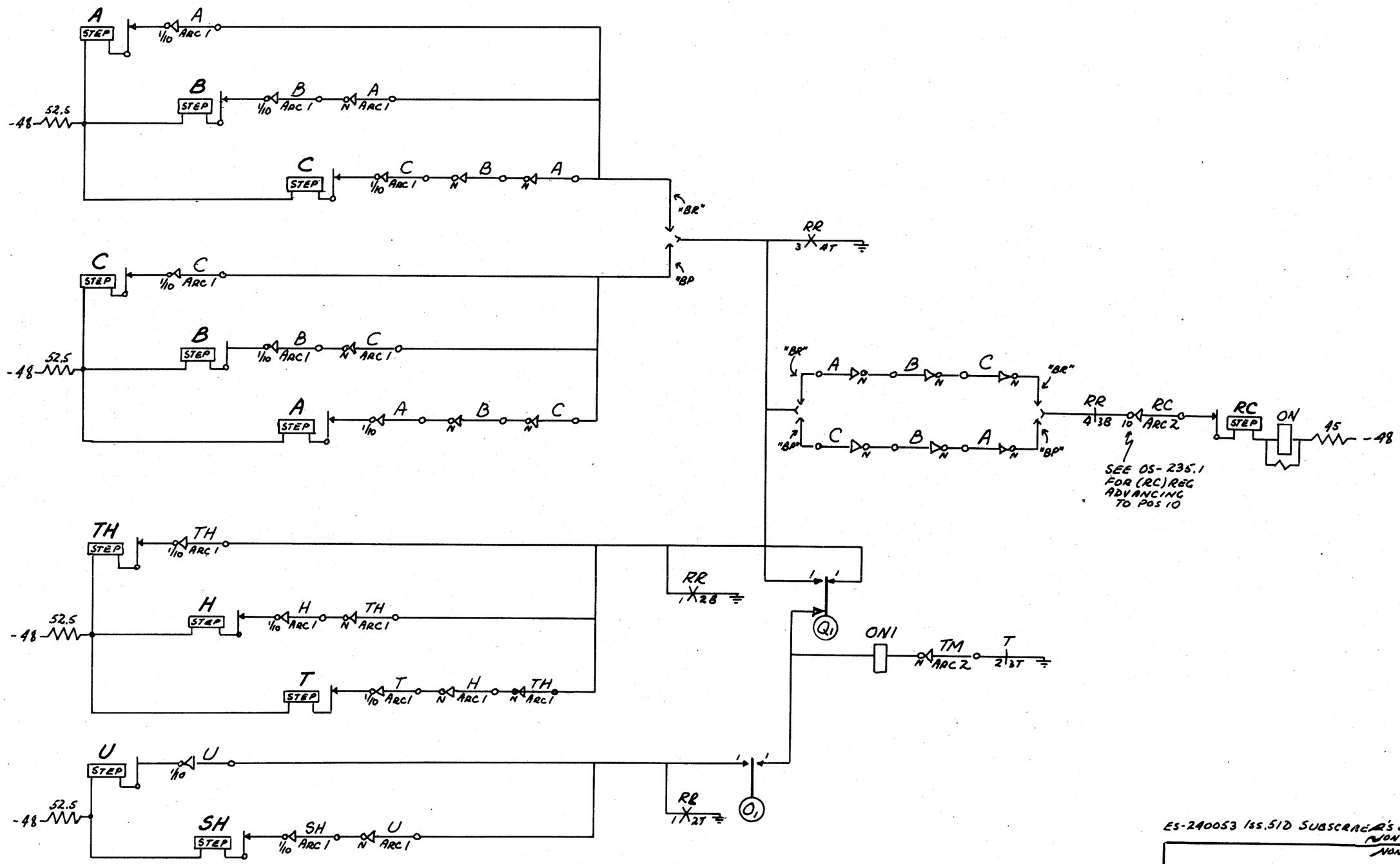

ISSUE	1
DATE	12-52
BY	GHH

ES-240053 Iss.51D SUBSCRIBER'S SENDER
NON-ZONE
NON-COIN

REGISTER RESTORAL

PANEL GCO	SEL. TYPE WITH SDR. SEL & TRANSL.	OS-234.1

ILL. BELL TEL. CO - PLANT SCHOOL

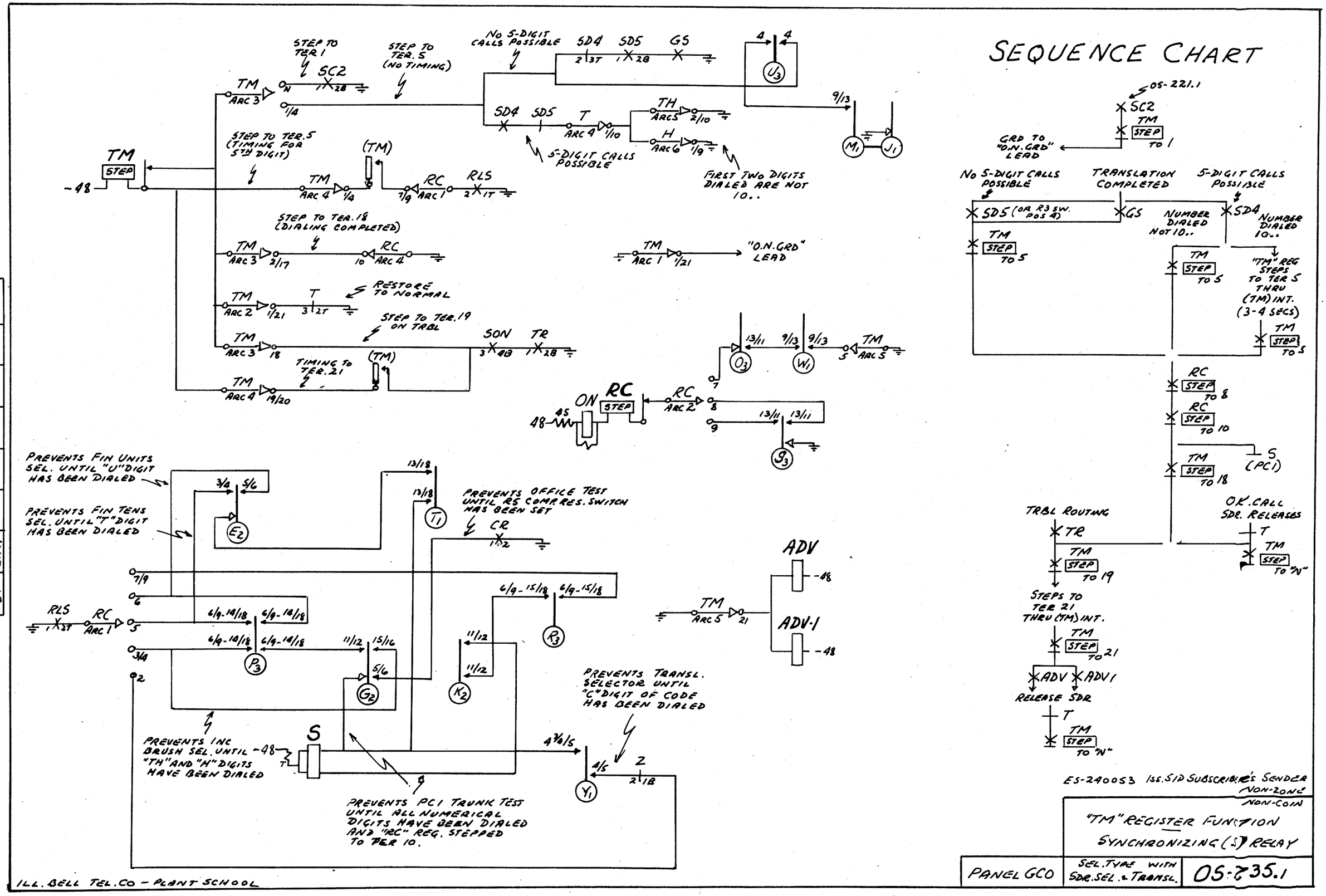
SEQUENCE CHART
STEP TO TER 1
STEP TO TER. 5 (NO TIMING)
NO 5-DIGIT CALLS POSSIBLE
SD4 SD5 GS
SC2
TM ARC 3
SD4 SD5 T
TH ARC 5
H ARC 6
ARC 4
5-DIGIT CALLS POSSIBLE
FIRST TWO DIGITS DIALED ARE NOT 10..
STEP TO TER. 5 (TIMING FOR 5TH DIGIT)
TM STEP
-48
(TM)
RC ARC 1
RLS
STEP TO TER. 18 (DIALING COMPLETED)
TM ARC 1
"O.N. GRD" LEAD
RESTORE TO NORMAL
STEP TO TER. 19 ON TRBL
SON TR
TIMING TO TER. 21
ON RC STEP
RC ARC 2
TM ARC 5
PREVENTS FIN UNITS SEL. UNTIL "U" DIGIT HAS BEEN DIALED
PREVENTS FIN TENS SEL. UNTIL "T" DIGIT HAS BEEN DIALED
PREVENTS OFFICE TEST UNTIL RS COMPRES. SWITCH HAS BEEN SET
CR
ADV
ADV-1
PREVENTS TRANSL. SELECTOR UNTIL "C" DIGIT OF CODE HAS BEEN DIALED
PREVENTS INC BRUSH SEL. UNTIL "TH" AND "H" DIGITS HAVE BEEN DIALED
PREVENTS PC1 TRUNK TEST UNTIL ALL NUMERICAL DIGITS HAVE BEEN DIALED AND "RC" REG. STEPPED TO TER 10.
05-221.1
GRD TO "O.N. GRD" LEAD
TO 1
NO 5-DIGIT CALLS POSSIBLE
TRANSLATION COMPLETED
5-DIGIT CALLS POSSIBLE
SD5 (OR R3 SW. POS 4)
GS
NUMBER DIALED NOT 10..
SD4
NUMBER DIALED 10..
TO 5
"TM" REG STEPS TO TER 5 THRU (TM) INT. (3-4 SECS)
TO 8
TO 10
TO 18
S (PC1)
O.K. CALL SDR. RELEASES
TO "N"
TRBL ROUTING
TO 19
STEPS TO TER 21 THRU (TM) INT.
TO 21
ADV ADV1
RELEASE SDR
ES-240053 ISS. S1D SUBSCRIBER'S SENDER NON-ZONE NON-COIN
"TM" REGISTER FUNCTION
SYNCHRONIZING (S) RELAY
PANEL GCO
SEL. TYPE WITH SDR. SEL. & TRANSL.
OS-735.1
ISSUE 1
DATE 12-54
BY GHH
ILL. BELL TEL. CO - PLANT SCHOOL

SEQUENCE CHART

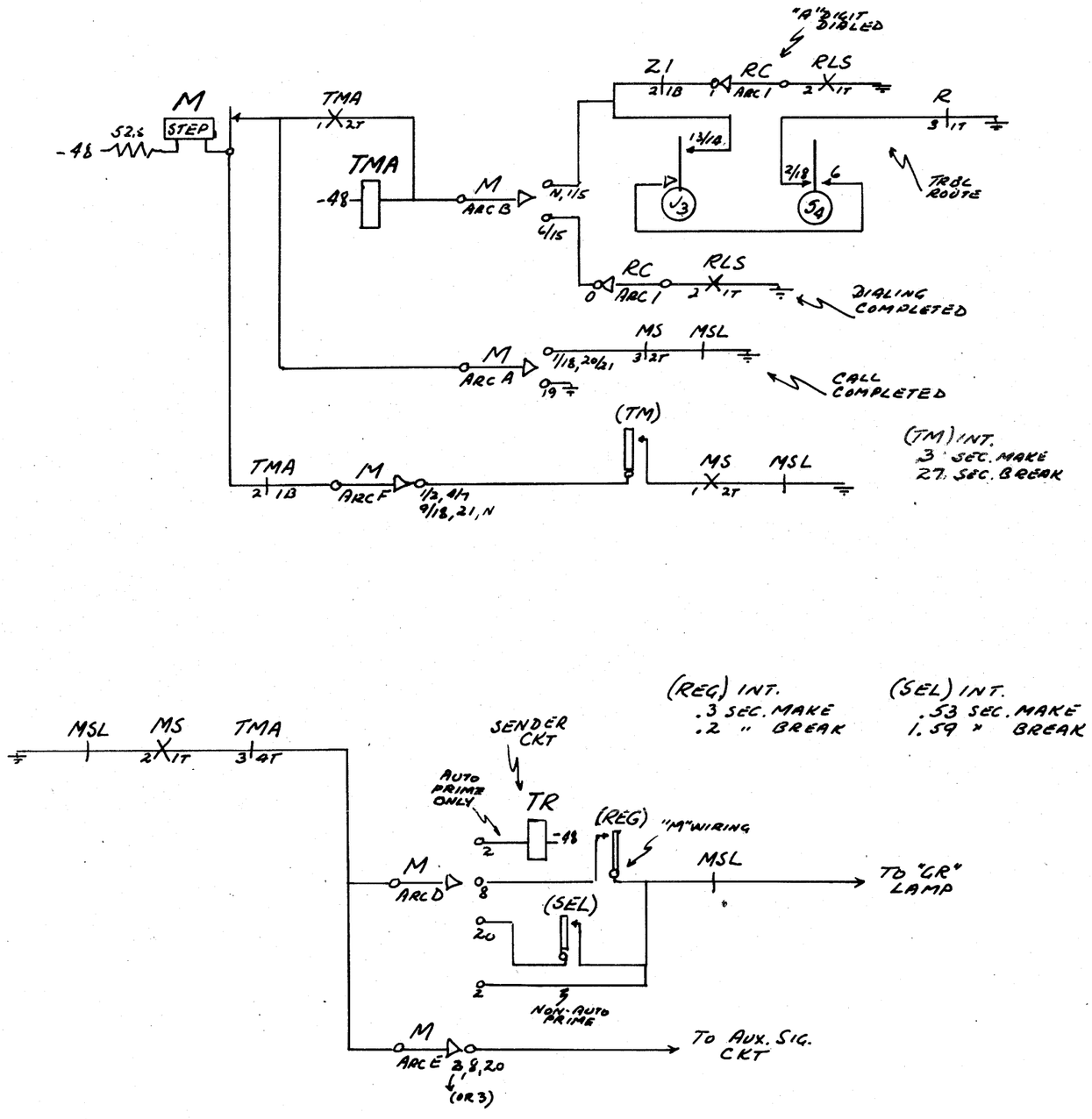

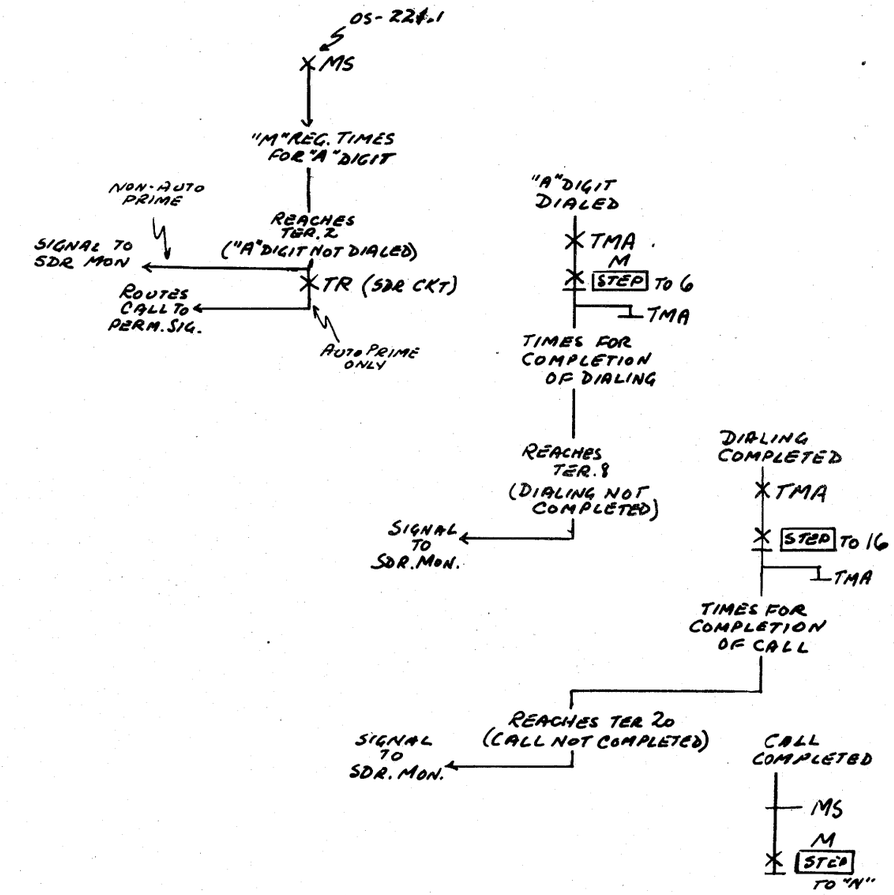

ISSUE	DATE	BY
1	12-54	GHH

ES-240053 ISS. 5ID SUBSCRIBER'S SENDER
ES-240054 ISS. 3ID SUB. SENDER TIME MEASURE CKT

NON-COIN

"M" REGISTER FUNCTION

PANEL GCO	SEL. TYPE SDR SDR. SEL. & TRANSL	OS-236.1

ILL. BELL TEL. CO – PLANT SCHOOL

SEQUENCE CHART

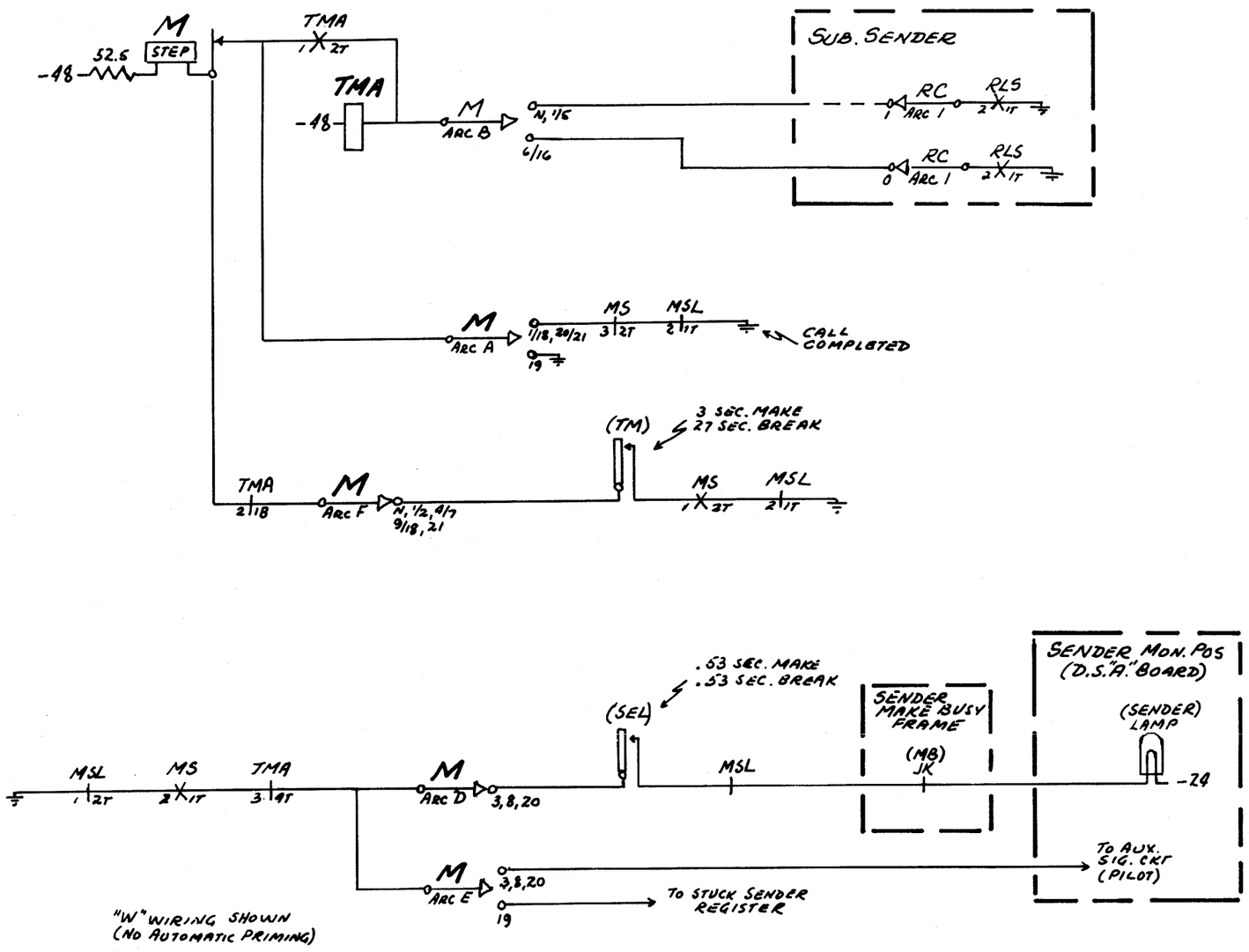

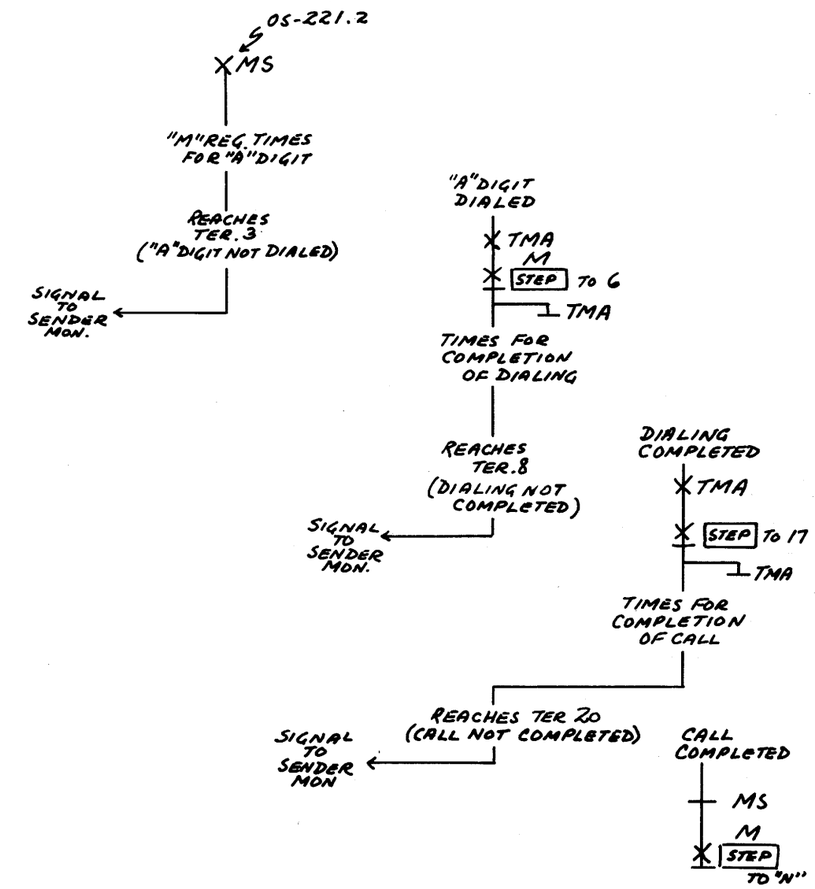

ISSUE	1
DATE	12-54
BY	GHH

SD-21826-011 ISS. 15D SUBSCRIBER'S SENDER
ES-20429-01 ISS. 24D SUB. SENDER TIME MEASURE CIRCUIT

NON-COIN

"M" REGISTER FUNCTION

PANEL GCO | SEL. TYPE SDR WITH SDR. SEL & DECODER | OS-236.2

ILL. BELL TEL. CO. – PLANT SCHOOL